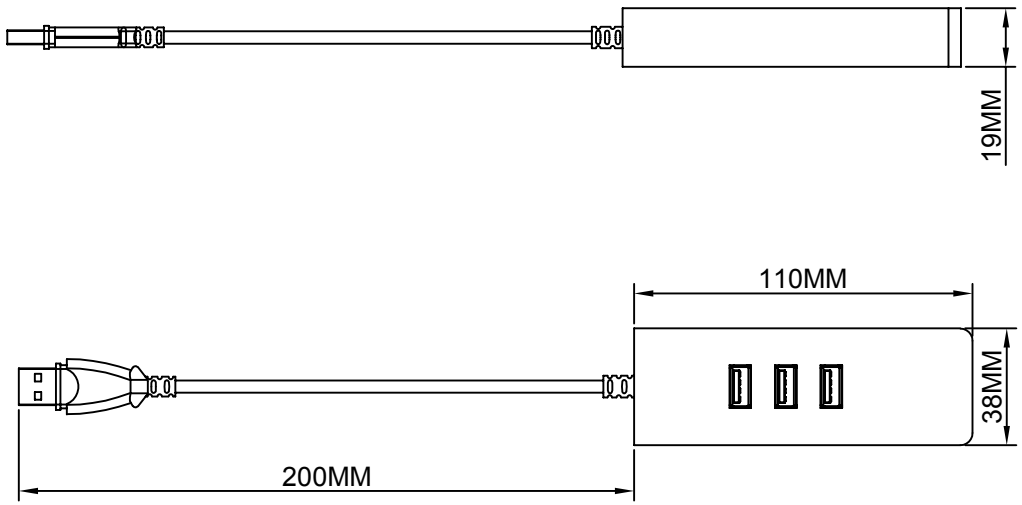

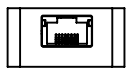

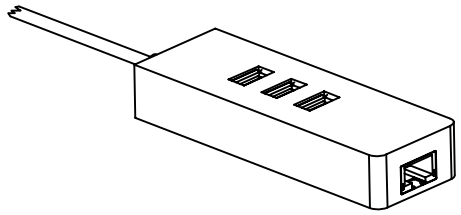

Features:

1. Providing ultra-fast network speed up to 1000 Mbps (1 Gbps) bandwidth, downward compatible with 10/100 Mbps.
2. USB3.0*3 ports support data transfer up to 5Gbps
3. Works with Windows 11/10/8.x/7/ Vista/ XP, MacOS 10.6 Linux systems.:

	Product Number		Specification Description	QTY	unit
2	USB 3.0 double-end			1	PCS
3	Plastic rear cover black ABS				g
4	ABS plastic shell black				g
5	OD:. 4.2MM black TPE exposed ROHS			200MM	mm
6	USB 3.0 cable 3.0 short body one piece, black rubber core, terminal nickel plated 3U, iron case nickel plated			1	PCS

Micro Connect

Plot:	SImon	Date: 2023.05.31	Tabulator	Tian Hongping
Careful:		Abrasive tool factory	Procurement Department	
Ratify:		Date:		size A4 / unit MM
connection		Product Number: MC-USB3.0HUBWETH		