PRODUCT DATASHEET · CAMERA ACCESSORIES

0070-11815

Junction Box · for Wolf & Deimos varifocal cameras

Key features

- **Cable management** houses cable connections and surplus cable
- **Robust build** aluminium alloy construction
- **Flexible** combines with Ernitec pole and corner mounts
- **Load capacity** up to 4 kg (8.82 lb)

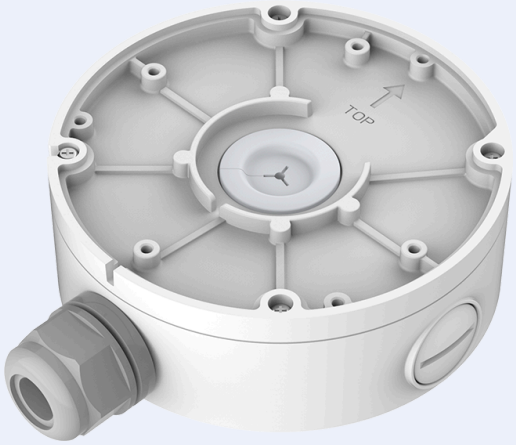

Ø141.8	4 kg	Aluminium	White	0.58 kg
DIAMETER (MM)	LOAD CAPACITY	MATERIAL	COLOUR	NET WEIGHT

Specifications	
Material	Aluminium alloy
Colour	White
Load capacity	4 kg (8.82 lb)
Dimensions	Ø141.8 × 51 mm (Ø5.58 × 2.0 in)
Net weight	0.58 kg (1.28 lb)
Warranty	5 years

Compatible with	Description
0070-11851	Pole Mount for Deimos bullet cameras
0070-11852	Pole Mount for Pluto & Wolf cameras
0070-11861	Corner Mount for Pluto & Wolf cameras

Dimensions (mm)

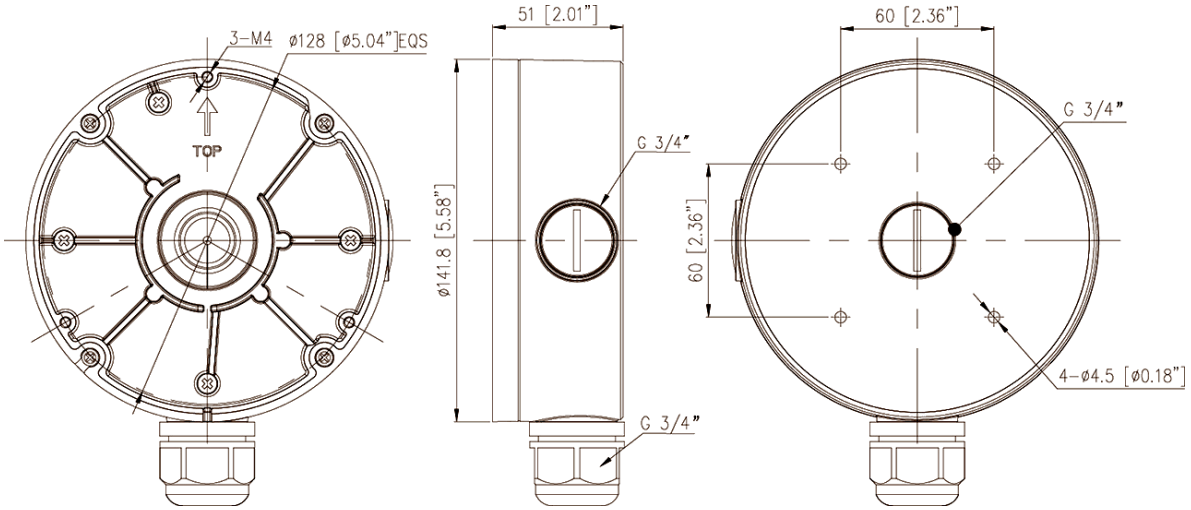

Compatible cameras

Camera	Name
0070-08113-V2	Wolf-PX-225IR
0070-08129	Wolf-UX-508WL
0070-08600	Wolf-BX3-712-T3

Camera	Name
0070-08601	Wolf-BX3-712-T7
0070-09104	DEIMOS-UX-610-3-4
0070-09105	DEIMOS-UX-610-7-8

Mounted directly under the camera; combine with an Ernitec pole or corner mount if required.

Specifications are subject to change without notice. Ernitec® is a registered trademark.