PRODUCT DATASHEET · CAMERA ACCESSORIES

0070-11822

Pendant Cap · for Pluto mini dome cameras

Key features

- **Pendant cap** adapter for Pluto mini dome cameras
- **Robust build** aluminium alloy construction
- **Flexible** combines with Ernitec wall brackets and pendant mounts
- **Load capacity** up to 3 kg (6.61 lb)



Cap	3 kg	Aluminium	White	0.19 kg
ADAPTER	LOAD CAPACITY	MATERIAL	COLOUR	NET WEIGHT

Specifications	
Material	Aluminium alloy
Colour	White
Load capacity	3 kg (6.61 lb)
Dimensions	99.5 × 99.5 × 75.8 mm (3.92 × 3.92 × 2.98 in)
Net weight	Approx. 0.19 kg (0.42 lb)
Warranty	5 years

Compatible with	Description
0070-11831	Goose Neck Wall Bracket for Pluto & Wolf cameras
0070-11832	Goose Neck Wall Bracket with Junction Box
0070-11841	Pendant Mount for Pluto & Wolf cameras
0070-11854	Universal External Pendant Mount

Dimensions (mm)

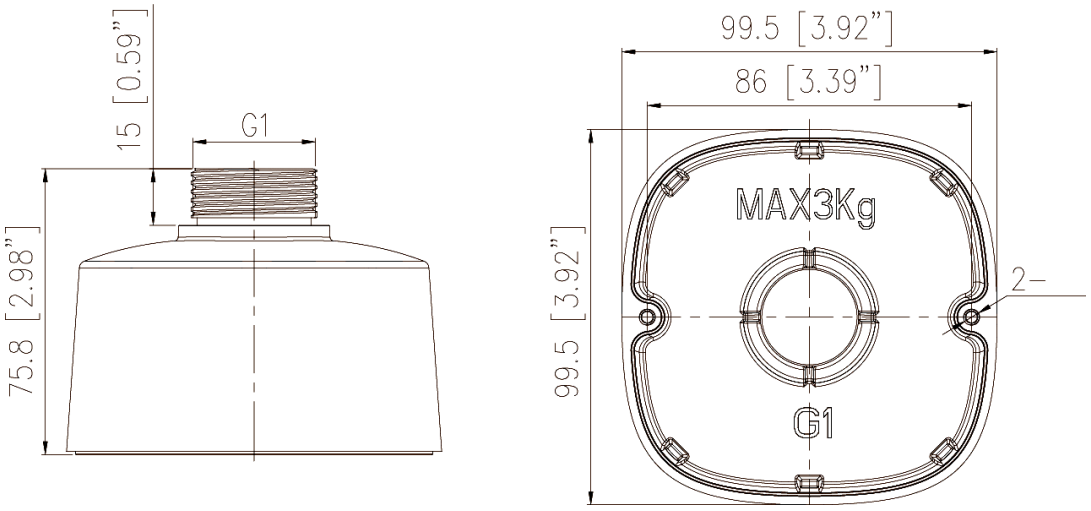

Compatible cameras

Camera	Name
0070-08011	Pluto-BX-115IR

Camera	Name
0070-08011-V2	Pluto-BX-125IR

Mounted together with an Ernitec wall bracket or pendant mount.

Specifications are subject to change without notice. Ernitec® is a registered trademark.