PRODUCT DATASHEET · CYGNUS NETWORK VIDEO RECORDERS

# 0070-10402

**Cygnus-BX-8CH-AI** · 8-Channel PoE 4K Network Video Recorder

## Plug in, power up, record

A 1U 8-channel NVR with eight PoE ports, two disk bays, 4K HDMI output and AI search.

NDAA COMPLIANT | 8 × POE | ONVIF




| 8 CH | 8 × PoE | 80 Mbps | 4K | 2 × 12 TB | 5 YR |
|---|---|---|---|---|---|
| IP CAMERAS | 802.3AF/AT | BANDWIDTH | HDMI OUTPUT | SATA HDD | WARRANTY |

## Product overview

The **Ernitec Cygnus-BX-8CH-AI** is a network video recorder for up to eight IP cameras. Eight built-in PoE ports (802.3af/at, 128 W in total) power and connect the cameras with a single cable each, and 80 Mbps incoming and outgoing bandwidth handles cameras up to 12 MP.

Face comparison, human and vehicle attribute search and perimeter protection with target filtering run on the NVR itself, and live view goes out on HDMI up to 4K and VGA, mirrored or as two independent screens. Two SATA bays take disks of up to 12 TB each, with disk group support.

## Key features

- **8 IP channels** up to 80 Mbps in and out
- **Plug & play PoE** 8 ports, 802.3af/at, max. 128 W
- **Decoding** 1 ch 12 MP, 4 ch 4 MP, 8 ch 1080P
- **Dual display** HDMI up to 4K plus VGA, main/aux
- **Storage** 2 SATA bays, up to 12 TB each, ANR
- **Built-in PSU** 100–240 VAC, 372 × 311.2 × 46.4 mm

## Analytics & integration

- **Face comparison** and image-based search
- **Attribute search** human and vehicle
- **Perimeter** up to 4 ch intrusion with target filter
- **VCA linkage** alarms from camera analytics
- **Remote access** P2P, app push, up to 8 users
- **Cyber security** signed firmware, TLS, 802.1X

## Typical applications

Shops and retail chains · Offices and schools · Warehouses and logistics · Hotels and restaurants · Car parks and petrol stations.

# Recorder specification

| Video & audio | |
|---|---|
| IP camera input | 8 channels |
| HDMI output | 3840 × 2160, 1920 × 1080, 1280 × 1024, 1024 × 768 |
| VGA output | 1920 × 1080, 1280 × 1024, 1024 × 768 |
| Different source output | Supported (HDMI and VGA) |
| Multi-screen display | Mirrored: 1/4/8/9<br>Auxiliary screen mode: main 1/4, auxiliary 1/4 |
| Decoding capacity | 1 ch 12 MP, 4 ch 4 MP, 8 ch 1080P<br>With local intelligence enabled: 1 ch 12 MP, 4 ch 1080P, 8 ch D1 |

| Recording | |
|---|---|
| Video compression | H.265, H.264 |
| Recording resolution | 12 MP, 8 MP, 6 MP, 5 MP, 4 MP, 3 MP, 1080P, 720P, D1 etc. |
| Recording mode | Manual, schedule (regular, continuous), event |
| Dual stream | Supported |
| Audio compression | G.711A, G.711U, PCM |

| Playback & backup | |
|---|---|
| Synchronous playback | 8/4/1 |
| Search mode | Time/date, alarm, picture grid, event |
| Playback control | Play, pause, FF/REW, slow, digital zoom |
| Backup mode | USB device, network |

| Storage | |
|---|---|
| HDD | 2 × SATA interfaces |
| Capacity | Up to 12 TB per disk |
| Disk group | Supported |
| ANR | Supported |

| Intelligent analytics | |
|---|---|
| By NVR | Face comparison and image-based search; human and vehicle attribute search; up to 4 ch intrusion detection with human/vehicle target filtering |
| By camera | Intrusion, smart motion, single and double line crossing, object left, object removed, bad signal, loitering, multi-loitering, abnormal speed, wrong way, illegal parking, people counting, fence, enter and leave area, smoking detection, smoke and flame detection, fire spot detection etc. |
| Trigger actions | Buzzer, push message to app, full screen, email, FTP, PTZ, speaker, alarm out, camera alarm out, event recording |
| Smart search | Supported |

| Event | |
|---|---|
| General event | Motion detection, video loss, alarm in, abnormal alarm, alarm out |
| Abnormal alarm | Disk alarm, IP address conflict, network disconnect |
| Event actions | Buzzer, push message to app, full screen, email, FTP, PTZ, alarm output, recording |

| Network | |
|---|---|
| Bandwidth | Incoming 80 Mbps / outgoing 80 Mbps |
| Protocols | HTTP, HTTPS, TCP/IP, IPv4, IPv6, UPnP, UDP, RTSP, SMTP, NTP, DNS, DHCP, FTP, P2P, IP address filtering, DDNS, IEEE 802.1X, SNMP, 3G/4G, PPPoE |
| Remote users | Up to 8 users |
| P2P | P2P, Web NAT |
| Interoperability | ONVIF, SDK, CGI |
| Security | IP address filtering, user access log, IEEE 802.1X, TLS, signed firmware |

## Interfaces & general

| Interface | |
|---|---|
| **Network interface** | 1 × RJ-45, 10/100/1000 Mbps self-adaptive Ethernet |
| **PoE interface** | 8 ports, 10/100 Mbps, IEEE 802.3af/at, max. 128 W |
| **Video output** | 1 × HDMI, 1 × VGA |
| **Audio** | 1 × input, 1 × output |
| **Alarm** | 8 × input, 1 × output |
| **USB** | Front: 2 × USB 2.0; rear: 1 × USB 2.0 |
| **Reset button** | On-board reset button |

| General | |
|---|---|
| **Power supply** | 100 to 240 VAC |
| **Operating temperature** | −10 °C to 50 °C (14 °F to 122 °F) |
| **Operating humidity** | ≤ 90% RH (non-condensing) |
| **Dimensions** | 372 × 311.2 × 46.4 mm (14.65 × 12.25 × 1.83 in) |
| **Net weight** | 2.1 kg (4.63 lb) without HDD |

| Certifications & compliance | |
|---|---|
| **Certifications** | CE |
| **EMC** | 2014/30/EU: EN 55032, EN IEC 61000-3-2, EN 61000-3-3, EN 55035 |
| **Safety** | LVD 2014/35/EU: EN IEC 62368-1 |
| **Environmental** | RoHS 2011/65/EU; REACH EC 1907/2006 (no SVHC above 0.1% w/w) |
| **Compliance** | NDAA |

## Dimensions (mm)

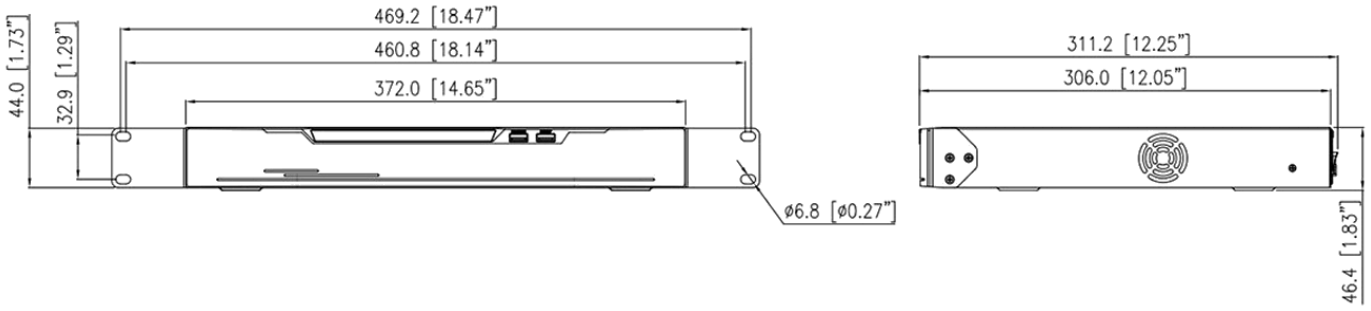


## Rear panel




Rear panel, left to right: 8 × PoE ports, LAN, audio out/in, VGA/HDMI, USB, alarm I/O, AC power inlet, power switch, fan.

Specifications are subject to change without notice. Ernitec® is a registered trademark.