SERVICE MANUAL

VIDA-24Q

AMPLIFIERS

Digital Amplifiers

INDEX

- BLOCK DIAGRAM
- TESTING & QUALITY CONTROL
- TECHNICAL CHARACTERISTICS
- SCHEMATICS
- COMPONENTS LOCATION SCHEMA
- WIRING DIAGRAM
- MECHANICAL DIAGRAM
- PACKING DIAGRAM

D-CLASS
MONO
AMPLIFIER

CH 1

ADC

DAC

+IN

OUT

OUTPUT

+

-

Temp
MONITOR

Vout
MONITOR

Iout
MONITOR

PROTECT/
ENABLE/
CLIP/
DC OUT

ADC

ADC

ADC

(1 CHANNEL DRAWING)

AUTO
STANDBY
CIRCUIT

CONTROL
μP

ETHERNET 1

ETHERNET 2

MICRO
SD

CPU/DSP

CONTROL PANEL

FAN

GPO

GP1

EXT. MUTE

GPI/GPO/MUTE

MODE
SELECTOR
Hi Z/Lo Z

ADC

POWER
MONITOR

DAC

AUX 1

DAC

AUX 2

MAINS
INPUT

AC
DC

AC
DC

POWER

drawn: Jordi Folch	date: 220527	project: EP04-20	product: VIDA24Q	
approved:	title: BLOCK DIAGRAM			
number: 10.1297	version: 01.00			

ecler	author: A.SERRANO	date: 230302	project: EP04-20	product: VIDA24Q	
num: 51.0575	version: 01.02	approved: J.WAQAR	title: BENCH TESTING PROCEDURE		

BENCH TESTING PROCEDURE FOR VIDA AMPLIFIERS				
	STEPS	**ALWAYS**		**See PROCESS Number**
1	First start-up	**Yes**		1
2	Measuring/writing the oscillation frequency in standby and without load	**Yes**		2
	Measuring/writing the oscillation frequency in standby and with load. Signal appearance	**Yes**		2
3	Functioning with no-load and anticlip	**Yes**		3
4	Power limiter operation: operating 1 channel only	**Yes**		4
5	Power limiter operation: several channels operating	**Yes**		5
7	Over-current (short-circuit) protections	**Yes**		7
8	Stability with capacitive load	No		8
9	Preparing the amplifier for burn-in with music signal	**Yes**		9

IMPORTANT REMARKS

- The power supply is high (±155V). Handle with care. Risk of discharge.
- Discharge the power supplies (with a R 165 ohm) before doing any manipulation inside.
- Connect the oscilloscope to the mains by using an ungrounded cable. The terms CH2- and CH3- are active.
- Quickly perform measurements involving power on the load to prevent them from getting too hot.
- The OSCs (oscillograms) to which some steps refer are in .pdf files and they are the reference.

REQUIRED MATERIAL

- 4 loads of 4Ω/>600W
- 1 resistor of 165Ω/70W to discharge the power supply
- 1 generator
- 1 oscilloscope
- 1 power meter Tektronix PA1000 (R&D equipment). It can display VOUT, IOUT, WOUT and FREQ at the same time.
- 1 frequency meter (PROMAX from R&D) in case the FREQ measurement with the PA1000 is not stable.
- PC with ETHERNET connection (IP range: 192.168.0.XXX) and ETHERNET switch
- Capacitor 1u5 / 400V.
- Current probes for oscilloscope

SETUP PA1000

- Connect with a short cable A_Hi to V_Lo
- Connect load between V_Lo and V_Hi
- Connect the amplifier output between A_Lo and V_Hi

Remark: *It is not necessary that the signal connected at A_Lo be the GND of the amplifier. With either polarity it measures correct.*

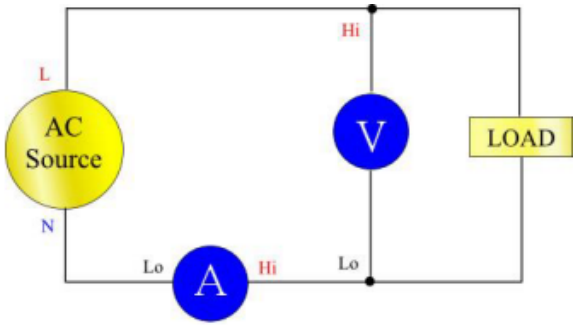

Figure 5: Typical PA1000 input connections

1. STARTUP

- Originally the amplifier should be without the cover. Make sure that the wiring is correct and that the mains switch on the rear panel is set to OFF.
- Do not connect any signal to the inputs as well as any load to the outputs.
- Connect the mains cable to the mains power supply
- Connect the ethernet cable (**NET1**) to the switch. It is Important to have only 1 ethernet port connected.

- Power Switch at the rear panel to ON position.
- Verify that the ON LED is lit and the control board LEDs perform the correct start-up sequence (See video).

- Check that the power supply LEDs (+155V and -155V internal) are not lit.
- Check that the CPU fan runs for 10s.
- Press the ON button on the front panel to startup.
- Check that the power supply starts, the STBY, +155V/-155V channel LEDs light up and the 80mm fan rotates (Large fan).

- Fit an unscrewed cover for protection and proper ventilation.
- Select LoZ/4Ω mode on all channels by using the DIP-SWITCH on the rear panel.

- Open the device's website by typing its IP address in a browser (192.168.0.100) (the appropriate password is required).
- Enter to the maintenance page "**SERVICE - VERIFICATION**".
- Check that all the indicators are in green (power supply, temperature, error, CPU consumption...).Otherwise, report the fault (the sleep mode lights on warning).
- Check that the mode of all channels is LoZ/4Ω and GAIN 34dB.
- Check that no "Error" appears in the "Errors" tab. Otherwise, report the incident.

- Check that the date/time indicated is correct (for the time being in the "Status" page but soon is going to be added in "Verification"). If it is not correct, report the error and update it from "Settings - Device". Then make Power OFF/ON and check if it has been recorded correctly. If it has not recorded correctly, remove it and repair.

  Keep the website connection until the end of the test.

2. MEASUREMENT OF FREQ OSCILLATION IN STANDBY AND SIGNAL APPEARANCE

- Do not connect signal on inputs neither load on outputs.
- Set VOL potentiometer to the minimum.
- Connect the PA1000 power meter with the appropriate setup to measure VOUT, IOUT, WOUT and FREQ at the same time.

- Check that the oscillation frequency is between 360 and 399 kHz (372 ±3%).
  ***Remark**: readings using the PA1000 or the Freq PROMAX are correct.*
- Write the value if necessary.
- Check the amplitude and aspect of the signal on the oscilloscope at the amplifier output. It must be a "clean" sine wave without noise (OSC 4).

- Connect a 4ohm load.
- Check that the oscillation frequency is between 375 and 399 kHz (387 ±3%).
  Remark: *the PA1000 reading "is unsteady" and it is not correct. See if this can be solved. Otherwise, use PROMAX.*
- Write the value if necessary.
- Check the amplitude and aspect of the signal on the oscilloscope. It must be "clean" sinusoidal and without noise (OSC 4).
- Check that no "Error" appears in the "Errors" tab. Otherwise, report the incident.
- Repeat the procedure for all channels.

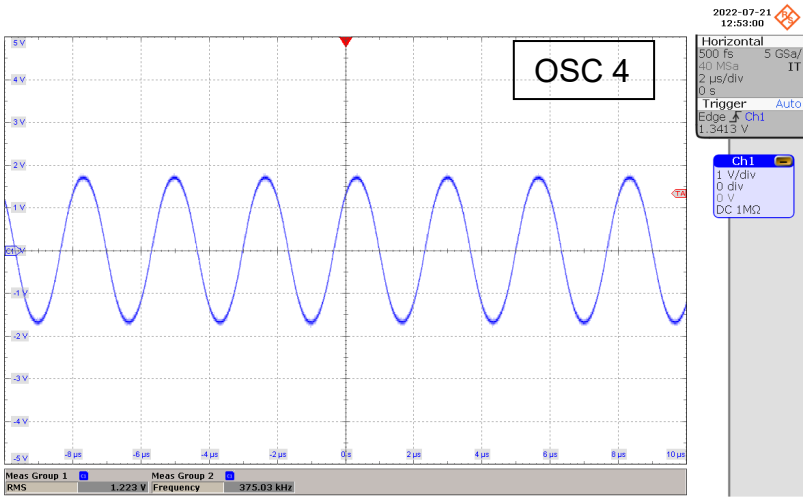

3. FUNCTIONING WITH NO-LOAD AND ANTICLIP

- VOL potentiometer at minimum
- No load on output
- Generator settings: Sine signal at 1kHz, +10dB
- SWITCH select matrix assignment: IN1 to OUT1; IN2 to OUT2; IN3 to OUT3; IN4 to OUT4
- Connecting the generator to the input of a channel
- Connect the PA1000 power meter with the appropriate setup to measure VOUT, IOUT, WOUT and FREQ at the same time.
- Connect the oscilloscope to the output

- Turn up VOL slowly until the maximum is reached.
- Check that the output signal amplitude is 145Vpic / 100Vrms (OSC 5).
- Check that the anticlip is working (the output should not appear clipped) (OSC 5)
- Check that the HF residue of the peaks is not excessive. Check with reference oscillogram.
- Check that the SP and CLIP LEDs of the channel are lit.
- Turn down the VOL to minimum.
- Check that no "Error" appears in the "Errors" tab. Otherwise, report the incident.

- Repeat the procedure for all channels.

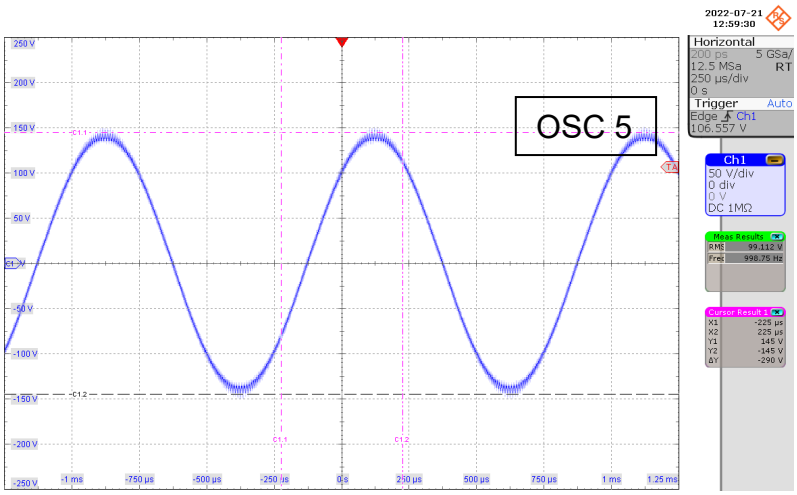

4. POWER LIMITER OPERATION: OPERATING 1 CHANNEL ONLY

- VOL potentiometer to the minimum.
- Connect 4Ω load to the output
- Generator settings: sinusoidal signal at 1kHz, +2.5dB
- SWITCH select matrix assignment: IN1 to OUT1; IN2 to OUT2; IN3 to OUT3; IN4 to OUT4.
- Connect the generator to the input of a channel.
- Connect the PA1000 power meter with the appropriate setup to measure VOUT, IOUT, WOUT and FREQ at the same time.
- Connect the oscilloscope to the output.

- Turn up VOL gradually and see that it limits to 600W (69-75Vpic @ 4Ω). Measure it quickly. The load heats up (OSC 6).
  ***Remark**: the dynamic response of the limiter allows powers higher than 600W for about 600-800ms.*
- Check that the LIMIT LED lights up.
- Check that the behaviour of the Voltage, Current, Power and Temperature meters is as expected, in terms of measurement value, variation range and oscillation... If in doubt, look at the reference amplifier.
- Turn down the VOL of the channel to the minimum.
- Check that no "Error" appears in the "Errors" tab. Otherwise, report the incident.

- Repeat the procedure for all channels.

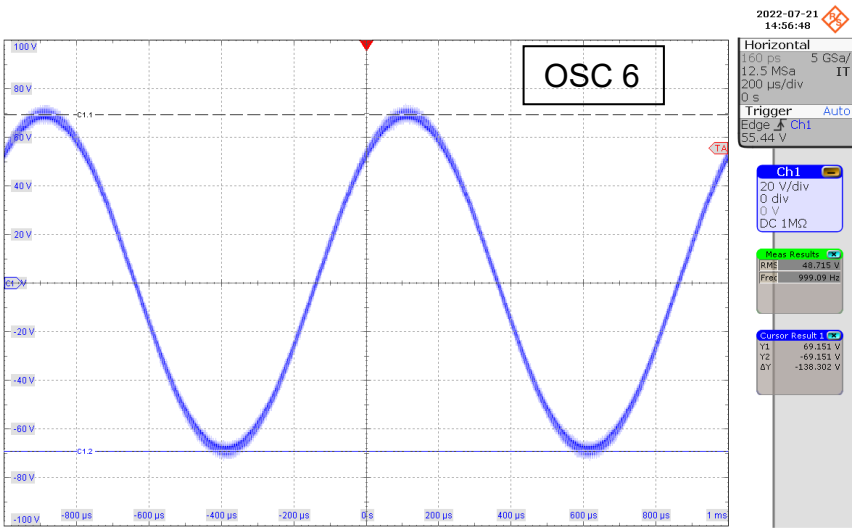

5. FAN & POWER LIMITER OPERATION: SEVERAL CHANNELS OPERATING

- Set All VOL potentiometers to minimum
- Connect a 4Ω load on each channel
- Generator settings: sine signal at 1kHz, +2.5dB
- SWITCH select matrix assignment: IN1 to OUT1-2-3-4
- Connect the generator to the IN1 input.
- Connect the PA1000 meter to CH1 with the appropriate setup to measure VOUT, IOUT, WOUT and FREQ at the same time.
- Connect the oscilloscope to the CH1 output (measure it only on CH1).

- Turn up VOL of CH1 and CH2. See that CH1 limits to 300W (49-54Vpic @ 4Ω). Measure it quicky. Loads get hot (OSC 7).
- Turn up VOL of CH3 and CH4. See CH1 limits to 150W (35-39Vpic @ 4Ω) (OSC 8).
  ***Remark**: the dynamic response of the limiter allows higher powers for about 600-800 ms.*
- Check that the behavior of the Voltage, Current, Power and Temperature meters is as expected, in terms of measurement value, variation range and oscillation... If in doubt, look at the reference amplifier.
- Keep this stage for 2 minutes. Check that the fan gradually reaches the maximum speed.

- Turn down all channel VOLs to minimum. Check that the fan speed is reduced.
- Check that no "Error" appears in the "Errors" tab. Otherwise, report the incident.

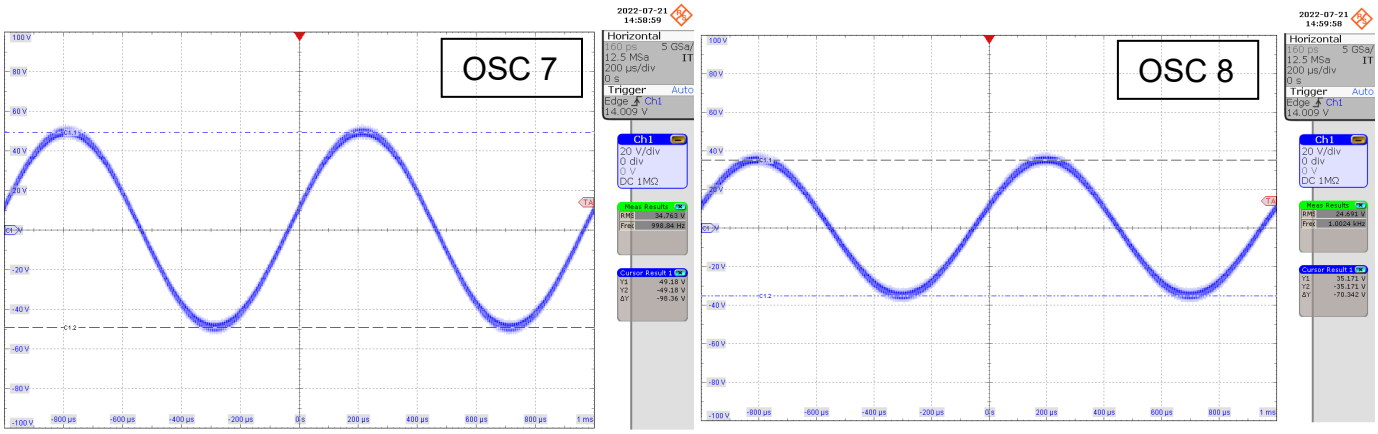

7 CHECKING OVER-CURRENT PROTECTIONS (and “LATCH” condition of the DC-DC converter)

- Current probe (FLUKE) + oscilloscope in "ROLL" mode must be used for this test.
- VOL potentiometer at minimum
- Generator settings: sinusoidal 1kHz, -10dB
- SWITCH select matrix assignment: IN1 to OUT1; IN2 to OUT2; IN3 to OUT3; IN4 to OUT4
- Connect the generator to the input of a channel.
- Connect the oscilloscope to the output of the channel.

- Make a crossover at the output of the channel (with a cable of approx. 1m).
- Turn up the VOL of the channel until the PROTECT LED lights up (shortly before the middle).
- Check that ONLY the PROTECT LED of the crossed channel lights up.
  Remark**: if CLIP and PROTECT of ALL channels light up, it means that the DC-DC converter fails (stays in latch).Notify this FAILURE to R&D.**
- Check that the output signal is long burst, 3 seconds apart (OSC 1).
- Check that "General Protect Error" is reported in the "Errors" tab. Otherwise, report the issue.

- Turn up the channel VOL to the maximum level.
- Check that the output signal is a very short burst, 3 seconds apart (OSC 2).
- Check that "General Protect Error" is reported in the "Errors" tab. Otherwise, report the issue.
- Turn down the VOL. Undo the crossover.
- Turn up the VOL to the maximum level and check the channel operates normally (14-15Vrms @ NO LOAD) (OSC3).

- Repeat the procedure for all channels.

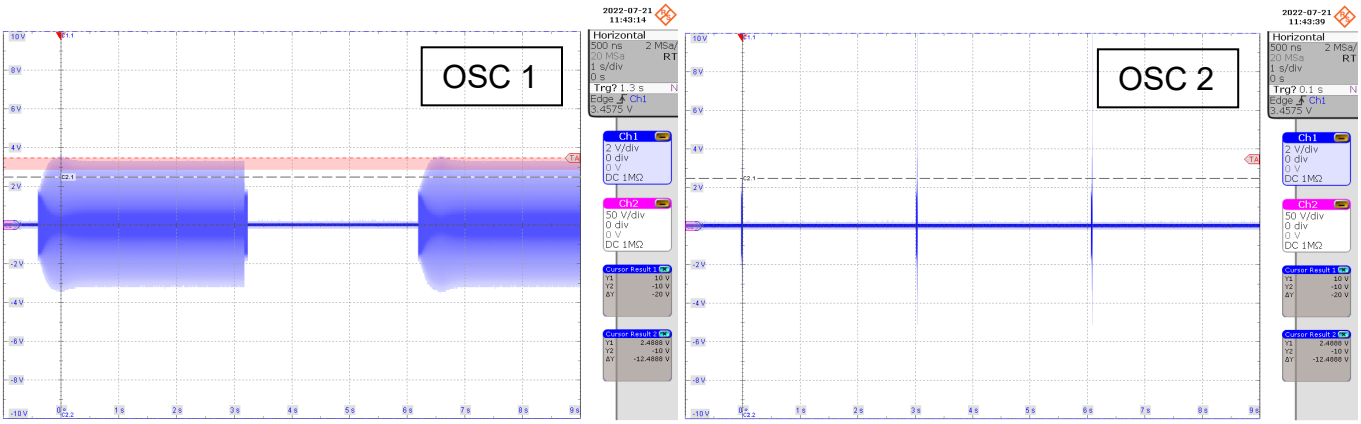

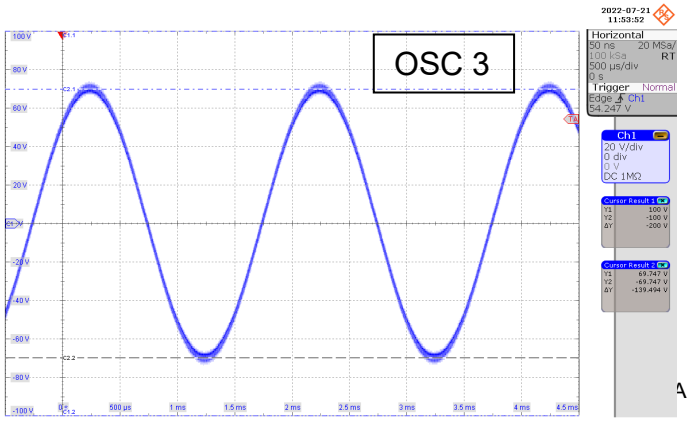

8 STABILITY WITH CAPACITIVE LOAD

- VOL potentiometer to minimum.
- Do not connect load on output.
- Generator settings: square 500Hz, +5dB.
- SWITCH select matrix assignment: IN1 to OUT1; IN2 to OUT2; IN3 to OUT3; IN4 to OUT4.
- Connect the generator to the input of a channel.
- Connect the oscilloscope to the output of the channel.

- Connect a 1u5/400V capacitor to the channel output.
- Turn up the VOL of the channel between 70% and 75% and check that the oscillogram (OSC 9) is OK.
- Turn up the VOL further, between 75% and 80% until the CLIP LED lights up.
- Check that no "Error" appears in the "Errors" tab. Otherwise, report the incident

- Repeat the procedure for all channels.

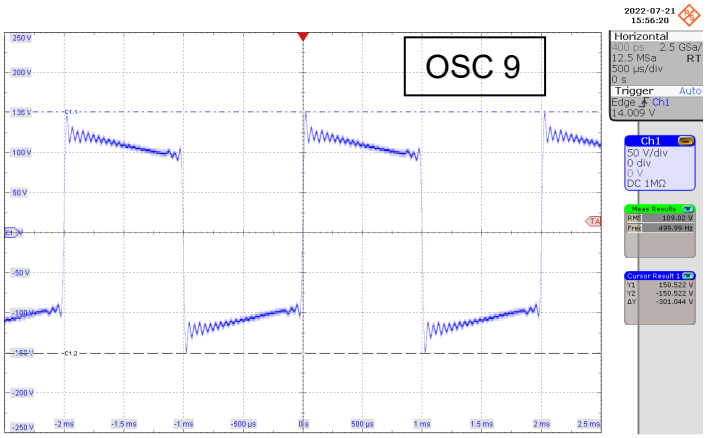

9 PREPARING THE AMPLIFIER FOR BURN-IN WITH MUSIC SIGNAL

- Access the VERIFICATION screen of the SERVICE web.
- Press the BURNING TEST button that allows the burn-in with musical signal that are 10 tracks integrated in software (by the internal PLAYER).
- Check that it starts playing automatically. Check the SP LEDs of all channels.
- Verify that the DIP switches on the back of the amplifier for impedance selection are set to **4 Ohm**.
    - The 2 Ohm DIPs of all channels are in the up position.
    - HI Z / LO Z DIPs of all channels are in **up position to HI Z**
    - The 8Ω-100V / 4Ω-70V DIPs of all channels are in the **down position at 4Ω-70V.**

- The amplifier is ready to be taken to the burn-in bench.

BURNING TEST

DURATION	24h alternating ON - OFF cycles
CLASS	CLASS 3 for VIDA24Q

INPUT CONDITIONS	OUTPUT CONDITIONS	DEVICE CONFIGURATION
➢ AC input connected to 230V from BENCH	➢ All OUTPUTS connected to the 4 Ω loads of the BENCH	➢ MAXIMUM CHANNEL VOLUME ➢ BURNING TEST activated ➢ 4 Ω DIP SWITCH mode

CHECKING WITH MUSIC PROCEDURE – PRELIMINARY

- **Required Material:**
  - CD player.
  - MicroSD card with songs.
  - Mixer with RCA inputs and XLR outputs.
  - XLR to EUROBLOCK balanced cable.
  - Tool for testing Remotes (GPIs) and GPOs.
  - Tool for testing External Mute.
  - Computer (PC) with a network card, Ethernet and DANTE Controller installed.
  - Ethernet switch capable for Dante Protocol.
  - DN44BOB DUMMY to send and receive DANTE channels.

- **Preliminary:**
  - Connect the VIDA amplifier to the PC via the network cable RJ45←→RJ45 (**NET 2 ONLY!**).
  - Connect the analogue outputs of the CD player to the analogue inputs of the mixer (RCA→RCA) and set it to playback mode.
  - Connect the mixer to the power amplifier, with the output volume set to minimum (-∞dB).

- **Preliminary – IP Configuración:**
  - Go to "Start→Settings→ Network and Dial-up Connections", select file "Local Area Connection" by right-clicking on it to show its Properties.
  - Select "Internet Protocol (TCP/IP)" and click on "Properties".
  - Select "Use the following IP address:", check that the network settings are "IP Address: 192.168.0.10", Subnet Mask: 255.255.255.0", "Gateway: 192.168.0.1", and click "OK" according to figure 1. Otherwise modify.

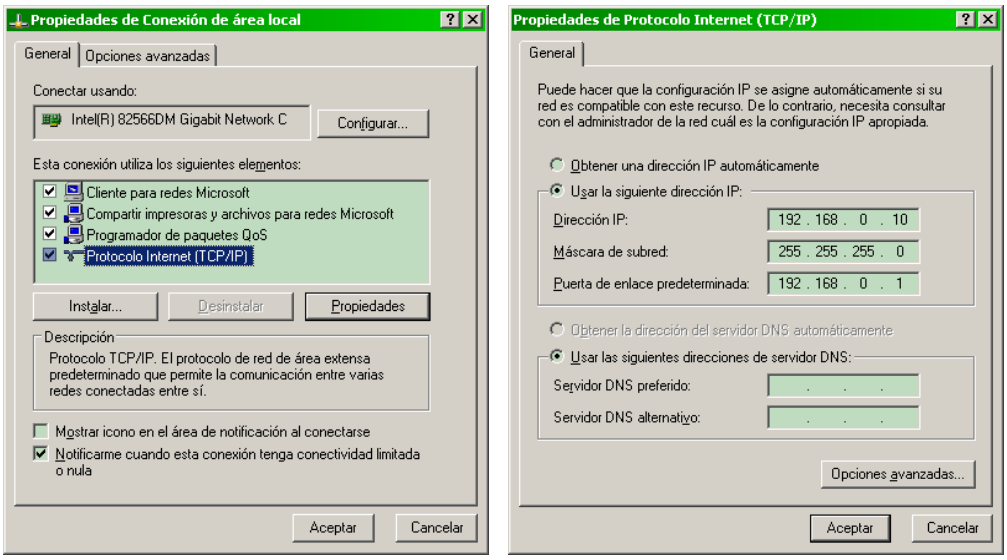

Figure 1

START-UP LEDs, RTC, DIP SWITCH

- Connect the amplifier to the mains, set all volumes to minimum, and switch on the amplifier by the switch POWER→ON.
- The VIDAs come out of the burn-in bench in PRODUCTION mode (STBY OFF).
- Confirm that the LED on the POWER button turns WHITE and the amplifier enters the ON mode.
    - Check that the STBY LEDs for each channel turn on and after a few seconds they turn off
    - If the THERMAL LED lights steadily, it is possible that a channel is damaged. If it flashes, it means that some unforeseen error has occurred during the burn-in process and it will not work normally again until a Restore Defaults is done.
- There is a signal as we are coming from the PRESET Burning Test and the player is active and routed to the outputs.
- Check that the LEDs on the two RJ45 connectors (orange and green) on the rear panel of the amplifier are illuminated.
    - Connect another ethernet cable to **NET1**, check the LEDs and disconnect the cable.

DEVICE verification in WEB APP

- Open the Ecler VIDA web page by entering the IP 192.168.0.100. Enter the application with **User: admin and Password: admin**. Click "Status" at the top left and the amplifier control interface will be shown.

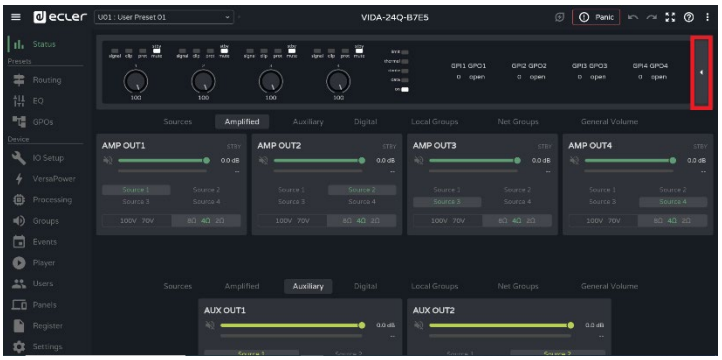

- The model will appear under Device (make sure it is VIDA-24Q).
- Check that the device is in 4 Ω mode. Otherwise, configure with the DIP SWITCH (see "DIP SWITCH CONFIGURATION" for more info).
- Check that the amplifier responds when pressing "Power" from the Ecler VIDA website (if it does not appear, press the button as shown in the screenshot). Check the background noise on the loudspeaker, free of buzzing, whistling or popping noises.

- Check that the status of the "Power" button on the VIDA website is updated when the POWER button on the amplifier is pressed. Check the background noise on the loudspeaker, free of buzzing, whistling or popping noises.

  - **RTC (Real Time Clock) VERIFICATION**
    - On this page, check that the RTC is working correctly. If correct date and time are not shown, click on "Time/Date". This will redirect you to "Settings - Device" where they can be set correctly.

  - **DIP SWITCH SETTINGS**

    - In the "Status - Amplified" section, there is high and low impedance selection. To check its operation, we have the switches on the back of the amplifier, in OUT MODE.
    - For AMP OUT 1, select HI Z, when we switch between 100V and 70V, the corresponding values should be highlighted on the VIDA website. The 2ohm setting has no effect on HI Z.
    - The same should be for LO Z, between 4ohm and 8ohm if the 2ohm switch is switched off (upwards). In case the 2ohm switch is on (down), then the 4/8ohm switch has no effect and only the 2ohm value should be highlighted on the web.
    - Repeat the process for each AMP OUT (see example figures below).

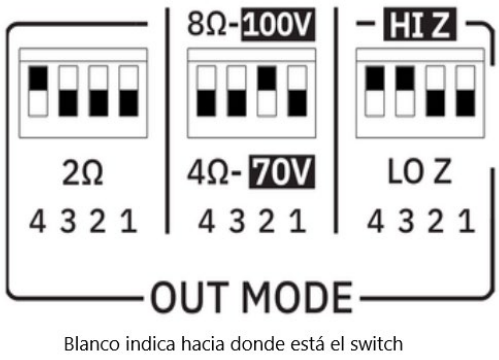

Blanco indica hacia donde está el switch

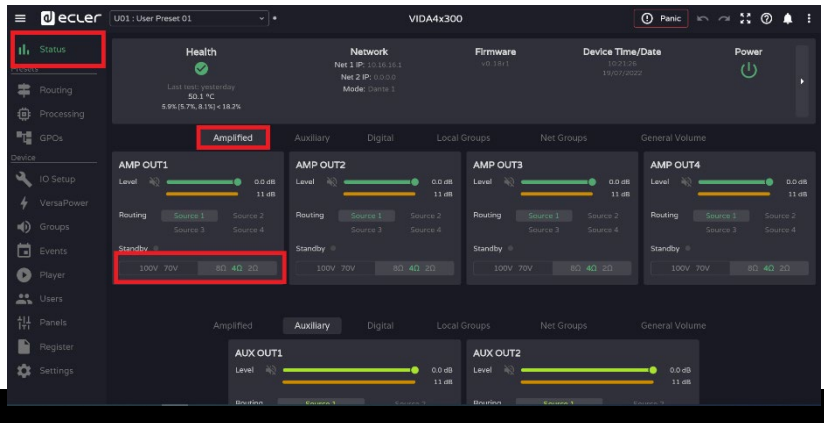

CHECKING WITH MUSIC PROCEDURE

1) 4 IN – 4 OUT (Audio Quality, Status SW ↔ HW, Signal & Clip)

- Go to the Service - Music Test tab.
- Click on "Load" from 4 Ins. This will load a preset routing the inputs to the amplifier outputs.
- Connect the analogue outputs of the mixer (L, R) to the analogue inputs of the amplifier (XLR→EUROBLOCK) one by one and consecutively (first the L to channel CH1, and the R to channel CH2, ...). Check that the SIGNAL LEDs of each input light up.
- Check the sound quality (no distortion or noise). Check the progress of the potentiometers both in the software (in the "Status" section) and on the knob of the amplifier as well. Make sure that they completely cut the signal.
- Change the output volume of the mixer, check the output level of the amplifier and check the SIGNAL and CLIP LEDs.
- Also check that there is no bad contact by tapping the unit on the table.
- Check that no "Error" appears in the "Errors" tab. Otherwise, report the incident.
- Repeat for the other channels.

2) AUTOSTBY VERIFICATION

- Activate the Auto-Standby function from the Music Test tab.

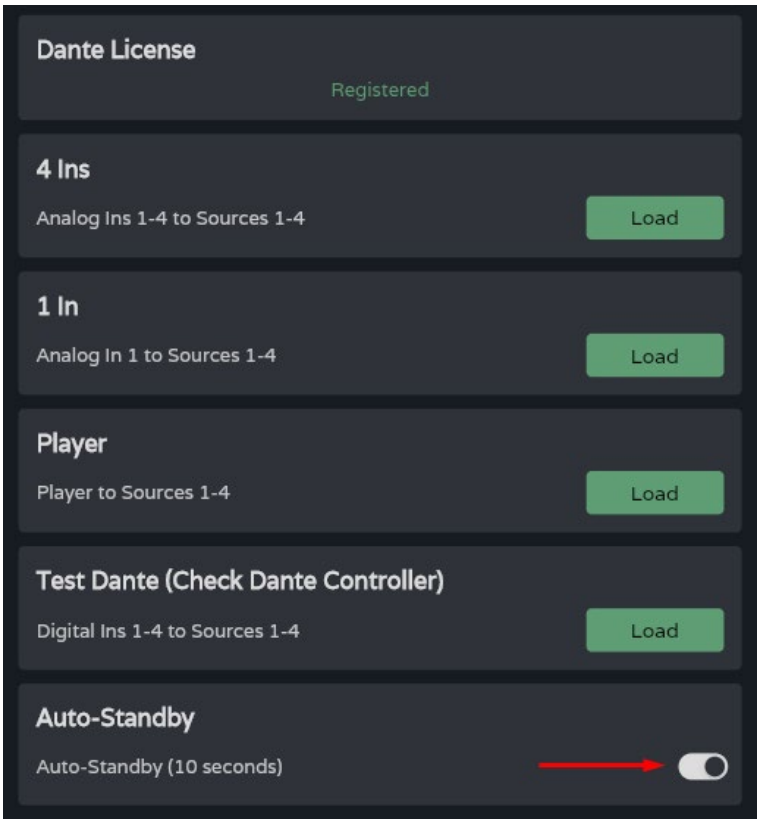

- Check that the channel enters in STBY mode if there is no input signal on the channel (only one) and after the elapsed set time.
- To check this status, check on the web and in the unit that the OUTPUT box of the channel turns off the Signal LED and turns on the STBY/MUTE LED. Check that the CLIP and PROT LEDs do not light up. If yes, check the FIRMWARE version.
- Repeat for all other channels.
- If all channels are tested at the same time, STBY of the channel does not light up.
- Check that when there is no signal on any channel and after the elapsed set time, the amplifier enters in AUTO SLEEP mode.
- To check this, check that the OUTPUT box of all the channels turns off the Signal LED and that the ON LED of the amplifier starts flashing. Check that the CLIP and PROT LEDs do not light up. If yes, check the FIRMWARE version.

3) 1 IN – 4 OUT (Short-circuit)

- Go to the Service - Music Test tab.
- Click on "load" 1In to load a preset that routes input 1 to all amplifier outputs.
- Repeat the above process but only changing the amplifier outputs.
- Short-circuit the output WITH signal on it. Check that the PROTECT LED lights up on the amplifier and in the "Status" section of the web. Verify that the amplifier is still properly working when it is removed.
- Check that "General Protect Error" is reported in the "Errors" tab. Otherwise, report the incident.

- Turn off the amplifier using the switch POWER→OFF and check that it does so free of buzzing, beeping or clicking noises.

4) AUX OUTs VERIFICATION

- Check that the audio coming out of the AUX OUTs, sounds correctly. When the 4 IN - 4 OUT or 1 IN - 4 OUT preset is loaded, the input signal is also routed to the AUX OUT so it is not necessary to do it manually.

5) GPI/GPO and external MUTE VERIFICATION

- Access the Status page, connect the tool on each GPI port and check that it changes on the web from 0 to 100. Repeat for each GPI.
- Activate the first GPO. Connect the tool (green LED → Open, red LED → closed) and check that it changes when activated / deactivated on the web. Repeat for all GPOs. Leave them open.
- Check that crossing "+" and "-" the external mute works and that it mutes all channels (use external mute tool).

6) MiniSD CARD + Player

- Insert the SD card into the amplifier.
- Check that the SD card comes in and out without any difficulty.
- Go to the Service - Music Test tab.
- Click on "Load" from Player. This will load a preset that routes the VIDA player to all analogue outputs of the amplifier.
- Check the sound quality (no distortion or noise). Check the potentiometer progress, both in the software ("Status") and on the amplifier and remote control as well. Make sure that they cut off the signal completely.
- Remove the SD card when the process is finished.

7) CHECK DANTE CONNECTIVITY

- Connect the VIDA24Q amplifier to the network via the NET2 connector.
- Open the VIDA24Q website by typing the address 192.168.0.101 in a browser.

- Go to the Service - Music Test tab
- It should appear as a licensed device (if it is not, it will be indicated by the "DANTE" button).
- Click "TEST DANTE" to configure the amplifier with signal routing for production testing. Go to the Dante Controller window.

- The routing of DANTE for production is configured so that:
- The amplifier sends the same signal on the output DANTE channels as it receives on the corresponding input DANTE channels.
- The output DANTE channels of the DN44BOB are assigned by the Dante controller to the input DANTE channels of the VIDA24Q.

- The input DANTE channels of the DN44BOB are assigned by the Dante controller to the output channels of the VIDA24Q.
- If the routing between DN44BOB and VIDA-24Q is not assigned automatically after pressing "TEST DANTE", the configuration must be replicated manually as shown in the following picture.

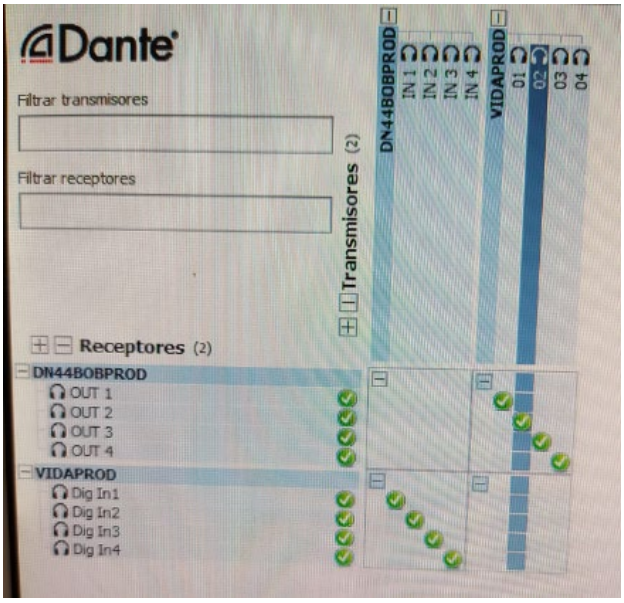

- Then, putting a music signal on one of the DANTE inputs of the DN44BOB, we should receive the same signal on its corresponding output channel and with the same level.
- Repeat for the 4 inputs of the DN44BOB to verify, one by one, the rest of the Dante connections.

8) FACTORY DEFAULT

- Make sure that the SD card is not inserted.
- Go to the Service - Music Test tab.
- Click on "Set to Factory Defaults".

9) VERIFY DANTE CONNECTIVITY AFTER FACTORY DEFAULT

- **Power OFF** on the amplifier.
- **Check that no SD card is inserted**.
- **Power ON**.
- By updating the DANTE CONTROLLER window, the unit should appear in Dante Controller as licensed (in black).

QUALITY CONTROL

- Make a visual inspection of the mechanical parts, observing that there are no scratches in the paintwork, as well as that the screws are tight and unmarked and that none of the screws is missing. Check the overall appearance of the unit.

TECHNICAL SPECIFICATIONS

VIDA-24Q

INPUTS	
Number of Inputs	4 analogue input channels 4 DANTE™/ AES67 Network Rx channels 1 embedded player, 1 embedded signal generator
Analogue input connection type	IN1-4: 3-pin Euroblock, balanced, pitch 3,5 mm.
Digital input connection type	Ethernet, managed via Dante™/ AES67 Controller
Input configuration	Digital matrix 4 in x 6 out (Settings by embedded web application)
AMPLIFIED OUTPUTS	
Number of amplified outputs	4
Amplified output connection type	2-pin Euroblock. Pitch: 7,62 mm Ref: DEGSON 5EDGRC-7.62
Output configuration	Lo-Z/Hi-Z, 70V/100V, 4Ω/8Ω/2Ω Output mode selection per channel Rear panel DIP SWITCH selectors
VERSAPOWER	
SYMMETRICAL - All channels driven @1kHz @CF9dB @ 1%THD	
Max output power @ 8Ω	600W
Max output power @ 4Ω	600W
Max output power @ 2Ω	600W
Max output power @ 100V	600W
Max output power @ 70V	600W
ASYMMETRICAL - Single channel driven @1kHz @CF9dB @ 1%THD	
Max output power @ 8Ω	1400W
Max output power @ 4Ω	2400W
Max output power @ 2Ω	1600W
Max output power @ 100V	2400W
Max output power @ 70V	2000W
AUXILIAR OUTPUTS	
Number of auxiliar outputs	2
Auxiliar output connection type	AUX1-2: 3-pin Euroblock, balanced (Euroblock pitch 3,5 mm. Settings by embedded web application)
DIGITAL OUTPUTS	
Number of digital outputs	4
Digital output connection type	Ethernet, managed via Dante™/ AES67 Controller

SIGNAL

Voltage gain	28 to 40 dBV
	30,2 to 42,2 dBu
Input sensitivity	-6 to +6 dBV
	-3,78 to 8,2 dBu
	0,5 to 2 Vrms
	(adjusted by means of Smart Versa Power utility)
Input impedance	>24k (balanced)
Max input level	+18 dBV
	+20,2 dBu
	(@ Gain 34 dBV)
Frequency response	15Hz-25kHz (-3dB, 1W any load)
THD + Noise	< 0,1 %
	0,015 Typ
	(@ 1kHz, from 0,1W to Full Power)
SNR	95 dBA (40dB Gain, from 20Hz - 20kHz)
Crosstalk	>80dB (@ 1kHz)
CMRR	> 65 Typ (from 20Hz-20kHz)
Damping factor	>500 (@ 8Ω, from 20Hz to 1kHz)

ELECTRICAL

Power supply	Universal, regulated SMPS with PFC
AC mains requirement	100-240 V @ 50-60Hz ((±10%)
Power factor correction	> 0,96 (Output Power > 500W)
AC mains connector	IEC C14 inlet (10Amax)

POWER & HEAT @230VAC

1/4 POWER, @ 4Ω (all channels driven)

Power	848 W | 888 VA
Current Draw	3,88 Arms
Thermal Loss	214,1kcal/h | 849,8BTU/h

1/8 POWER, @ 4Ω (all channels driven)

Power	498 W | 536 VA
Current Draw	2,33 Arms
Thermal Loss	170,3kcal/h | 675,8BTU/h

IDLE (all channels driven)

Power	72 W | 122 VA
Current Draw	0,52 Arms
Thermal Loss	61,9kcal/h | 245,7BTU/h

SLEEP MODE (all channels driven)

Power	4,1 W | 23,8 VA
Current Draw	0,1 Arms
Thermal Loss	3,5kcal/h | 14BTU/h

POWER & HEAT @120VAC	
1/4 POWER, @ 4Ω (all channels driven)	
Power	855 W | 865 VA
Current Draw	7,37 Arms
Thermal Loss	219,3kcal/h | 870,3BTU/h
1/8 POWER, @ 4Ω (all channels driven)	
Power	483 W | 493 VA
Current Draw	4,16 Arms
Thermal Loss	157,4kcal/h | 624,6BTU/h
IDLE (all channels driven)	
Power	68 W | 89 VA
Current Draw	0,75 Arms
Thermal Loss	58,5kcal/h | 232,1BTU/h
SLEEP MODE (all channels driven)	
Power	3,6 W | 10,2 VA
Current Draw	0,09 Arms
Thermal Loss	3,1kcal/h | 12,3BTU/h

TECHNOLOGIES	
Amplification technology	Class D
Energy saving	Auto standby function programmable per channel Sleep Mode function selectable
Efficiency	72% (1/4 POWER, @ 4Ω)
Cooling	Fan (forced air, front to back airflow. Temperature controlled continuously variable speed)
Maximum fan noise	45dB (maximum acoustical noise @1m)

PROTECTIONS	
DC protection	Yes (protects loudspeaker and installation against DC and infrasonic signals at the outputs)
HF protection	Yes (protects the loudspeakers against non-audible, strong, non-musical high frequency signals)
Short-circuit protection	Yes (protects the amplifier from overcurrent, short circuit or other stressful events for the output stages with output reduction or MUTE (automatic protection reset)
Clip limiter	Yes (prevents severely clipped waveforms from reaching loudspeakers, while still maintaining full peak power output).
Long term limiter	Yes (protects the loudspeaker and amplifier against steady long term rms signals (sine wave, non-music) reducing maximum output)
Thermal protection	Yes (output power reduction when output stages operating temperature up to 90 °C (194 °F). Mute when output stages operating temperature up to 100 °C (212 °F)

REMOTE CONTROL CONNECTIONS	
ON / OFF	No
GPIs	x4 GPIs (0-10V) Function and settings by embedded web application 5-pin Euroblock connector, rear panel. Euroblock pitch 3,5 mm
GPOs	x4 NC / NO contacts 4x 3pins Euroblock connector, rear panel Euroblock pitch 3,5 mm
External MUTE	Yes, contact (2 pins Euroblock connector, rear panel, Euroblock pitch 3,5 mm)
LOCAL CONTROL	
Attenuators	Programmable Front panel knobs (defaults: Amplified OUTs attenuators)
Output mode settings	Lo-Z/Hi-Z, 70V/100V, 4Ω/8Ω/2Ω Output mode selection per channel (Rear panel DIP SWITCH selectors)
RUN/SLEEP mode	Yes, front panel push-button (operate when pressed more than 0,5 seconds)
Power ON/OFF	Yes, back panel switch (red LED indicator)
CONNECTIVITY	
Ethernet	Ethernet Base-Tx 10/100/1000Mb Auto X-Over (CAT5 up to 100m. Settings by embedded web application)
DANTE™/ AES67 Protocol	Dante™/ AES67 4x Tx / 4x Rx channels Primary and secondary capability. RJ-45 ports (Settings by embedded web application)
Programming and control	Embedded web application
MONITORING	
Signal Present	SP LED (White) per channel (trigger @- 40 dBV)
Clipping	CLIP LED (Red) per channel (Clip, Versa power limiter, Peak power, Power supply overload)
Protect	PROT LED (Red) per channel (Current overload, Output short circuit, Under voltage, Over Voltage, DC OUT (slow blink), HF protect (fast blink)
Standby / Mute	STBY/MUTE LED (White) per channel (ON when STBY, BLINK when MUTE)
Limit	LIMIT LED (Red) per unit (Power (power supply) overload)
Thermal	THERMAL LED (Red) per unit (Temperature limiter)
Dante™/ AES67	DANTE™/ AES67 LED (White) per unit (OFF NO WIRE, ON when MASTER, BLINK when SLAVE)
Data	DATA LED (White) per unit (ON when DATA)
On	ON LED (White) per unit (ON when RUN, SLOW BLINK when SLEEP by BUTTON, FAST BLINK when SLEEP by AUTOSTBY, VERY FAST BLINK when HW Fault)

DIGITAL ENGINE	
Processor	Quad core 64bits 1,5GHz
AUDIO CONVERTERS	
Sampling rate	48 kHz
Resolution	24 bit
Dynamic range	114dB
PROCESSING	
Digital processing	32/64 bit
Latency	2,8 ms (Analog IN to analog OUT)
Inputs processing	Noise gate, HPF, Freq. Shifter, compressor/limiter
Outputs processing	Delay, Parametric EQ, Graphic EQ independent for every amp out and aux out. Limiters independent for every amp out Smart VersaPower management (Settings by embedded web application)
Others	Preset management, Internal matrix, priority & backup signals management, local & network groups, events management incl. calendar (Settings by embedded web application)
REAL-TIME CLOCK	
Retention time	> 5 years
Accuracy	±1 minute / month
Battery	VARTA CR2032 3V, 230mAh
LOCAL STORAGE	
Micro SD	SDXC
Capacity	Up to 2TB
File system	FAT16, FAT 32, VFAT (read/write) NTFS (read) Multi-partition up to 1
Playable audio files	mp3, ogg, WAV, FLAC, AIFF
Files analysis	65354 playable folders 65354 playable folders within each folder 65354 playable files within each folder
Folder hierarchy	Up to 8 containing the root directory
Sorting	UNICODE, in alphabetical order Up to 100 folders / files by folder Folders/files over 100 sorted in the FAT order
PHYSICAL	
Operating temperature	-10° to 50° C 14° to 122° F (performance may be reduced above 40 °C)
Operating humidity	5 - 85% RH, non-condensing
Storage temperature	-10° to 50° C 14° to 122° F

Storage humidity	5 - 85% RH, non-condensing
Installation options	Rack 19" installation & desktop
Included accessories	Universal Main cords, Euroblock Connectors (inputs /outputs), Desktop feet, rack 19" installation hardware
Optional accessories	-
Dimensions (WxHxD)	482.6 x 88 x 410 mm. / 19 x 3.46 x 16.14 inches
Weight	9.3 kg / 20.5 lb
Shipping dimensions (WxHxD)	650 x 125 x 600 mm. / 25.59 x 4.92 x 23.62 inches
Shipping weight	12.3 kg / 27.1 lb

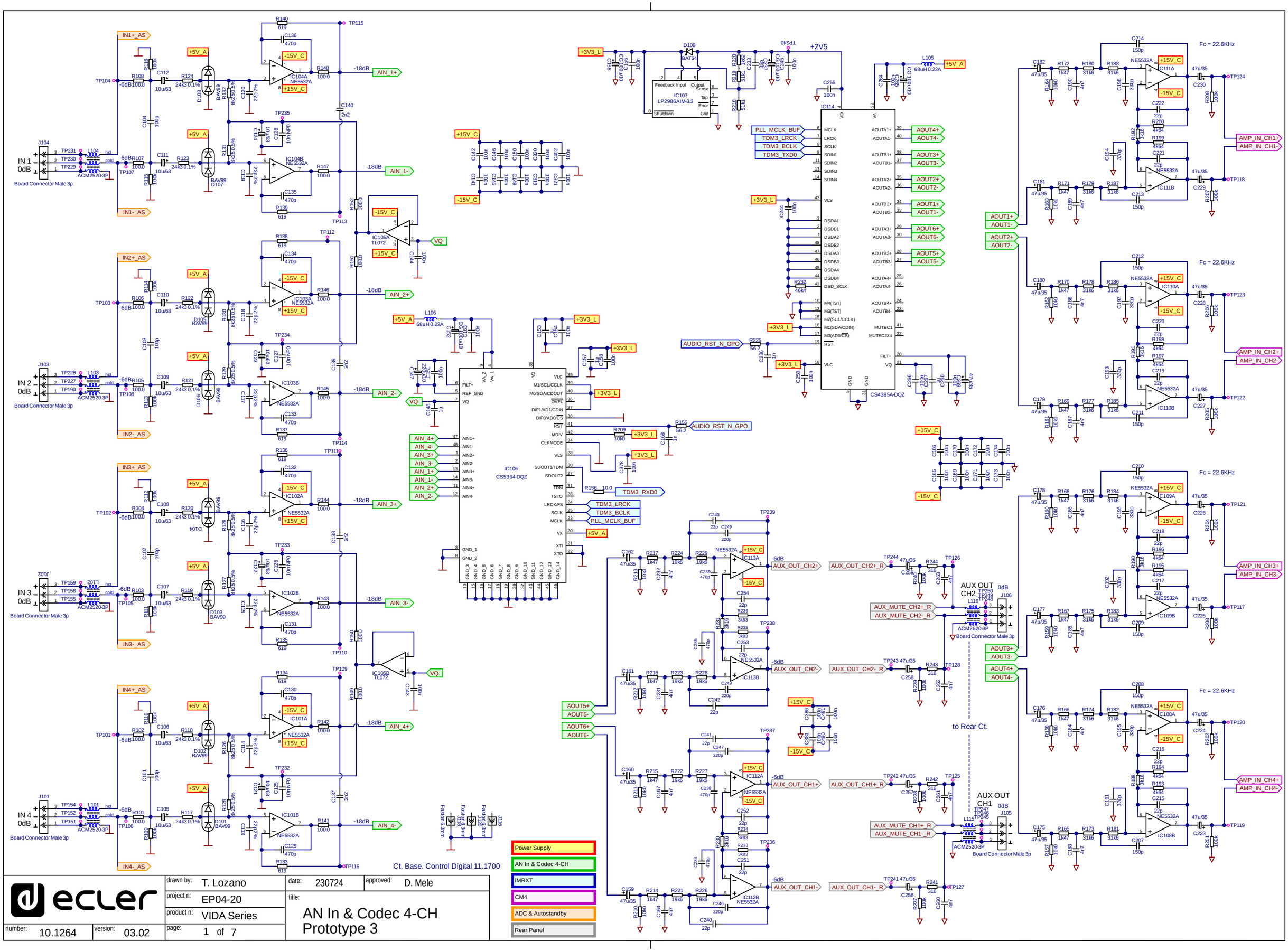

drawn by: T. Lozano	date: 230724	approved: D. Mele	
project n: EP04-20	title: AN In & Codec 4-CH Prototype 3		
product n: VIDA Series			
number: 10.1264	version: 03.02	page: 1 of 7	

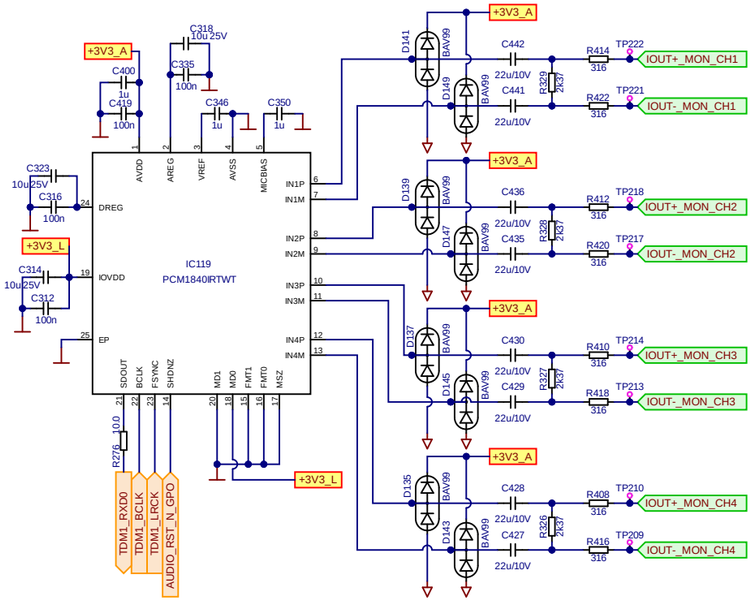

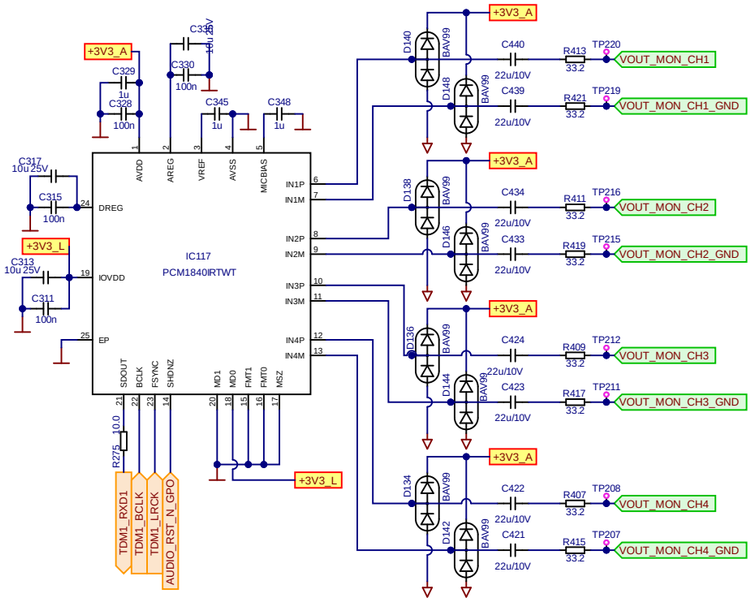

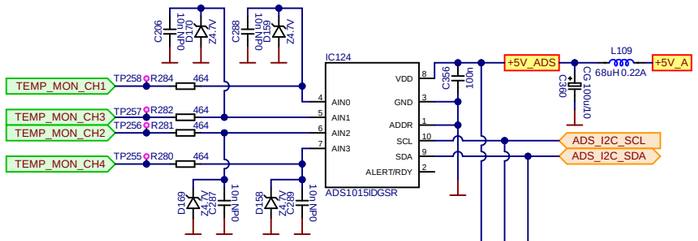

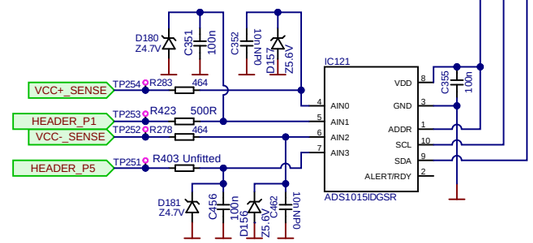

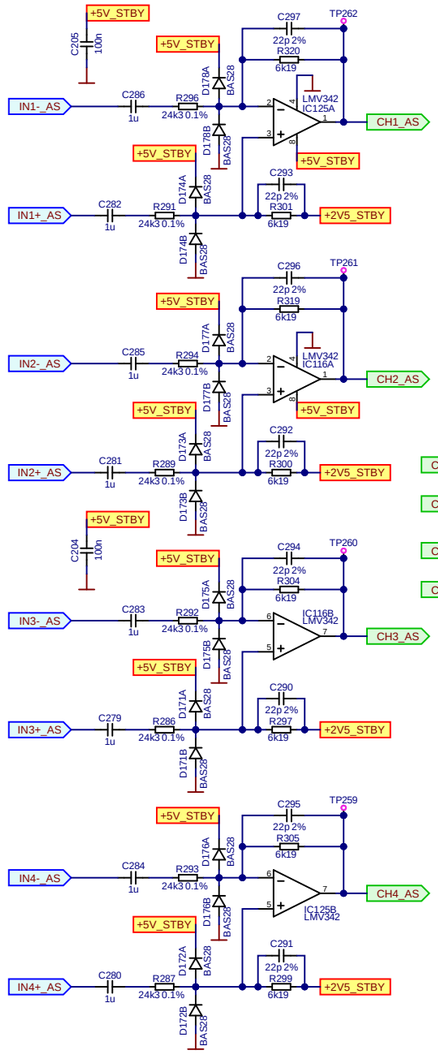

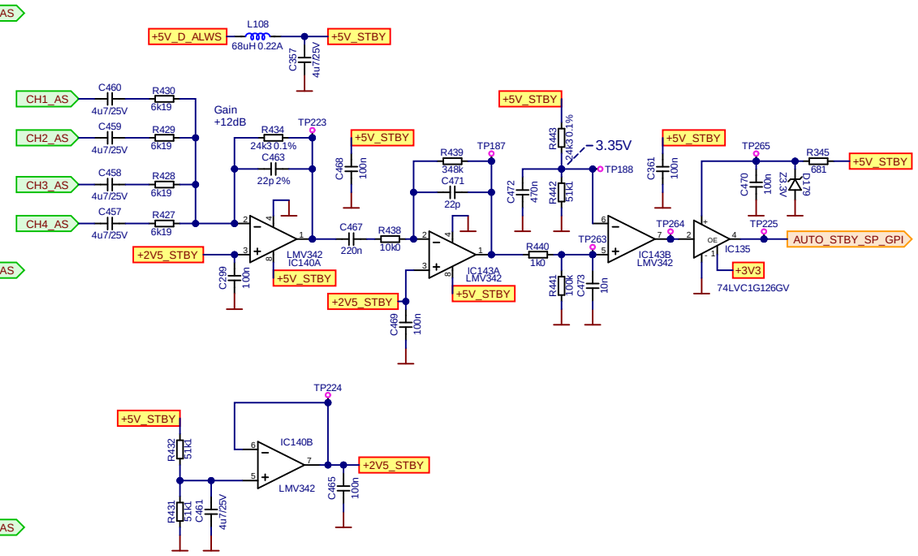

Power Supply

RP-CM4, RTC & uSD

to AN In & CODEC

i.MRXT & PLL

drawn by: T. Lozano	date: 230724	approved: D. Mele	
project n: EP04-20	title: ADC & Autostandby Prototype 3		
product n: VIDA Series			
number: 10.1264	version: 03.02	page: 2 of 7	

i.MXRT

IC126A
MIMXRT1021DAF5A
L110 68uH 0.22A
+3V3
DCDC_OUT
1.1V
2.5V
TP297
VDDA_ADC_3P3
VDD_SOC_IN_1
VDD_SOC_IN_2
VDD_SOC_IN_3
VDD_SOC_IN_4
VDD_SOC_IN_5
VDD_HIGH_IN
VDD_HIGH_CAP
NVCC_PLL
VDD_SNVS_IN
VDD_SNVS_CAP
NGND_KEL0
VSS_1
VSS_2
VSS_3
VSS_4
VSS_5
VSS_6
VSS_7
VSS_8

IC150A
SN74HC244PWR
IC150B
TP305 IMXRT_SPI_MISO
TP304 SR_OE_N_REAR
TP303 SR_OE_N_FRONT
TP302 SR_SPI_CLK_REAR
TP301 SR_SPI_CLK_FRONT
TP300 SR_SPI_MOSI_REAR
TP299 SR_SPI_MOSI_FRONT
TP298 RELE_SMPS_ON
TP306 SR_SPI_MISO

LED DEBUG (G)
D160 LTST-C170KGKT
TP307
FAN2_TC
+3V3_L

IC126E
MIMXRT1021DAF5A
LED_DEBUG_IMXRT
AUDIO_COUNTER
IMXRT_SPI_MISO
ADS_I2C_SDA
ADS_I2C_SCL
PROTECT_CH1_GPI
TDM1_RXD0
TDM1_RXD1
PROTECT_CH2_GPI
PROTECT_CH3_GPI
PROTECT_CH4_GPI
TDM1_BCLK
TDM1_LRCK
TDM3_TXD0
TDM3_BCLK
TDM3_LRCK
AUDIO_AUX_MUTE_GPO
TP310
CLIP_CH1
CLIP_CH2
CLIP_CH3
CLIP_CH4
AUDIO_MCLK
IMXRT_DSP_IRQ
TDM3_RXD0
ENABLE_CH2_GPO
ENABLE_CH3_GPO
ENABLE_CH4_GPO
ENABLE_CH1_GPO
74LVC1G126GV
IC153
IC149
SR_LATCH_REAR_GPO
SR_LATCH_FRONT_GPO
TP318
TP317

IC126B
MIMXRT1021DAF5A
IMXRT_RESET_N
FAN1_TC
ONOFF
POR_B
TEST_MODE
PMIC_ON_REQ
XTALI
XTALO
RTC_XTALI
RTC_XTALO
DCDC_IN
DCDC_IN_Q
DCDC_LP
DCDC_PSWITCH
DCDC_GND
L111 4.7uH 1.18A
X101 24MHz

IC126D
MIMXRT1021DAF5A
SWD_SWDIO
SWD_SWDCLK
DC_OUT
AUDIO_RST_N_GPO
AUTO_STBY_SP_GPI
UART_CM4_RX_IMXRT_TX
UART_CM4_TX_IMXRT_RX
RELE_SMPS_ON_GPO
CM4_IMXRT_SPI_A_SCK
SWD_SWO
CM4_IMXRT_SPI_A_MISO
CM4_IMXRT_SPI_A_MOSI
AIN_KNOB_VOLUME_CH1
AIN_KNOB_VOLUME_CH2
TP309
TP308
AIN_KNOB_VOLUME_CH3
AIN_KNOB_VOLUME_CH4
AIN_REMOTE_VOLUME_CH1
AIN_REMOTE_VOLUME_CH2
AIN_REMOTE_VOLUME_CH3
AIN_REMOTE_VOLUME_CH4

IC126C
MIMXRT1021DAF5A
+5V_D_ALWS
USB_OTG1_VBUS
USB_OTG1_DN
USB_OTG1_DP
VDD_USB_CAP
USB_OTG1_CHD_B
3.0V

J124
Rotary Lock 20p
SWD CONNECTOR
SWD_SWDIO
SWD_SWDCLK
SWD_SWO
SRST_N
IMXRT_RST_N_GPO
IMXRT_RESET_N
SN74LVC1G08DBVR
IC151

IC133
MCP47CVB02-E/UN
IC134
SI5351B-B02073-GM
X104 27MHz
DAC_PLL_I2C_SCL
DAC_PLL_I2C_SDA
IMXRT_DSP_IRQ
CM4_DSP_IRQ
AUDIO_MCLK
AUDIO_COUNTER
PLL_MCLK_BUF
IC146
74LVC1G126GV
+5V_A

Power Supply
i.MRXT & PLL
Rear Panel
AN In & CODEC
Front Panel
ADC & Autostandby
RP-CM4, RTC & uSD

drawn by: T. Lozano	date: 230724	approved: D. Mele	
project n: EP04-20	title: i.MRXT & PLL Prototype 3		
product n: VIDA Series			
number: 10.1264	version: 03.02	page: 3 of 7	

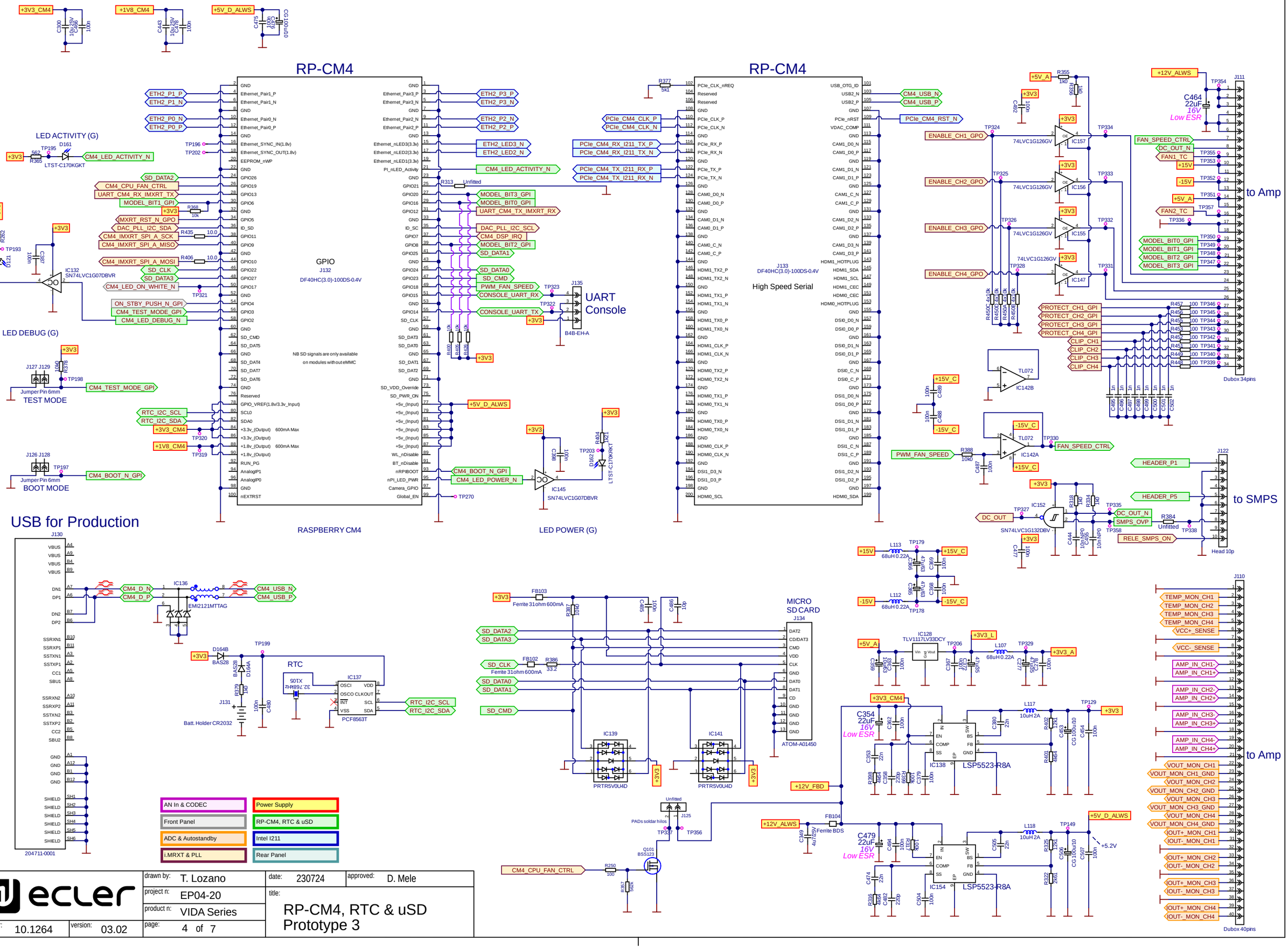
RP-CM4
GPIO
J132
DF40HC(3.0)-100DS-0.4V
NB SD signals are only available on modules without eMMC
RASPBERRY CM4
RP-CM4
J133
DF40HC(3.0)-100DS-0.4V
High Speed Serial
LED ACTIVITY (G)
LED DEBUG (G)
TEST MODE
BOOT MODE
UART Console
LED POWER (G)
USB for Production
J130
204711-0001
RTC
Batt. Holder CR2032
MICRO SD CARD
J134
ATOM-A01450
to Amp
to SMPS
Dubox 34pins
Dubox 40pins
Head 10p
AN In & CODEC
Power Supply
Front Panel
RP-CM4, RTC & uSD
ADC & Autostandby
Intel I211
i.MRXT & PLL
Rear Panel
ecler
drawn by: T. Lozano
date: 230724
approved: D. Mele
project n: EP04-20
product n: VIDA Series
title: RP-CM4, RTC & uSD Prototype 3
number: 10.1264
version: 03.02
page: 4 of 7

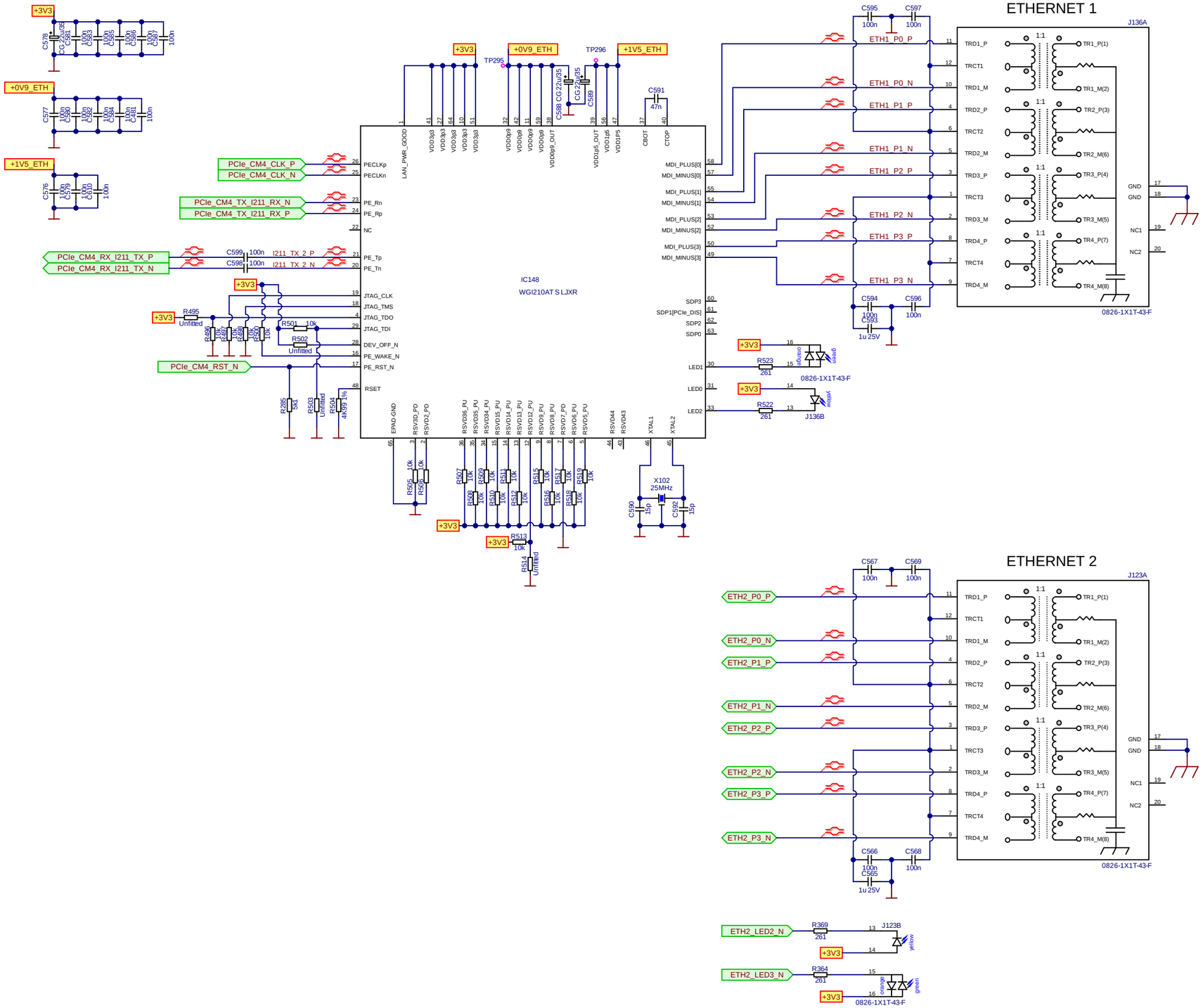

Incluir separadores Wurth y tornillos

Spacer Sold. M2.5x3 SP102
SP103
Spacer Sold. M2.5x3
Spacer Sold. M2.5x3
SP104
Spacer Sold. M2.5x3 SP105

HS101
RASPBERRY PI ALU HEATSINK + SCREW + THPAD

Ventilador + 2tornillos ventilador
FCT850301600

230724

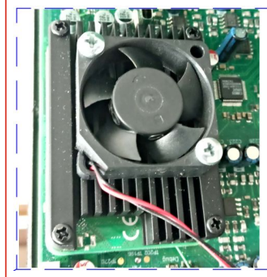

4 x SCREWS M2.5 FOR FIXING HEATSINK
INCLUDED IN HEATSINK PACK (NO PART CODE)

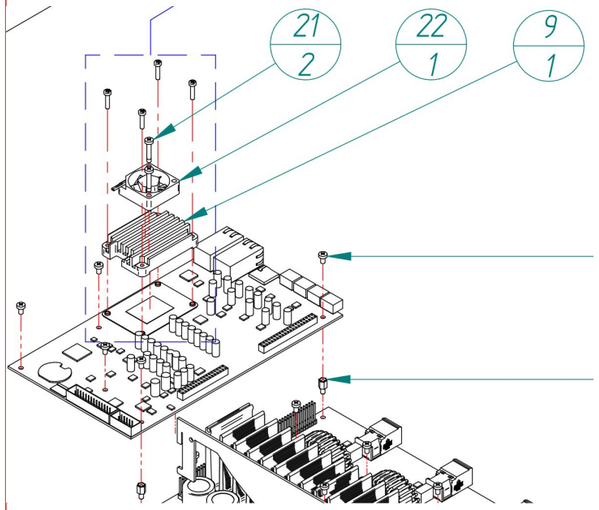

9	1	FCRAD8990000	RASPBERRY PI ALU HEATSINK + SCREWS
21	2	FCT850301600	SCREW M3x16 TRILOBULAR WHITE
22	1	FCVEN0300000	FAN 30x30 12VDC

Power Supply

RP-CM4, RTC & uSD

ecler	drawn by: T. Lozano	date: 230724	approved: D. Mele	
	project n: EP04-20	title: Intel I211 Prototype 3		
	product n: VIDA Series			
number: 10.1264	version: 03.02	page: 5 of 7		

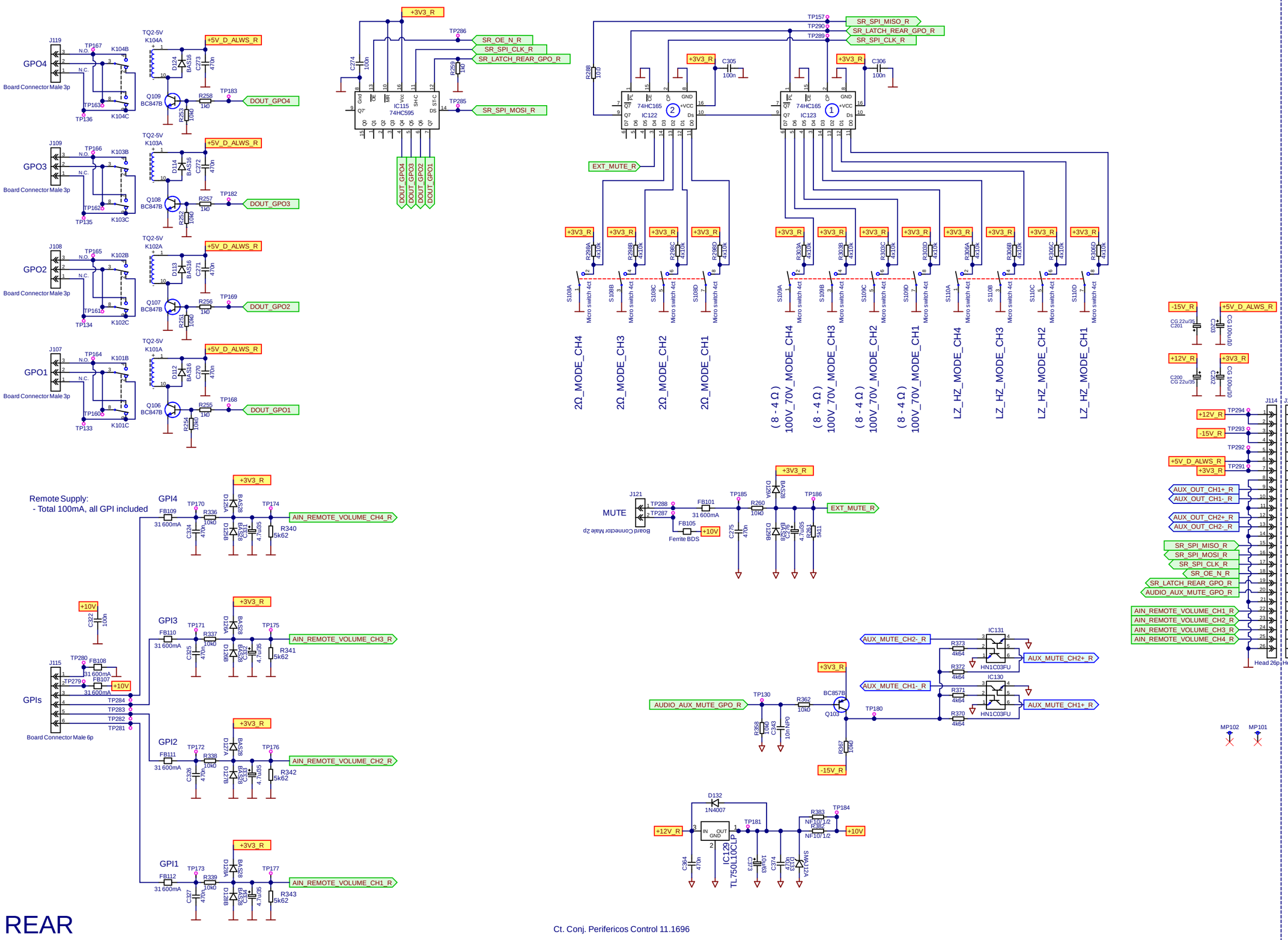

Ct. Conj. Perifericos Control 11.1696

ecler	drawn by: T. Lozano	date: 230724	approved: D. Mele	Power Supply
	project n: EP04-20	title: Rear Panel Prototype 3		Rear Panel
	product n: VIDA Series			AN In & CODEC
number: 10.1264	version: 03.02	page: 6 of 7		i.MRXT & PLL

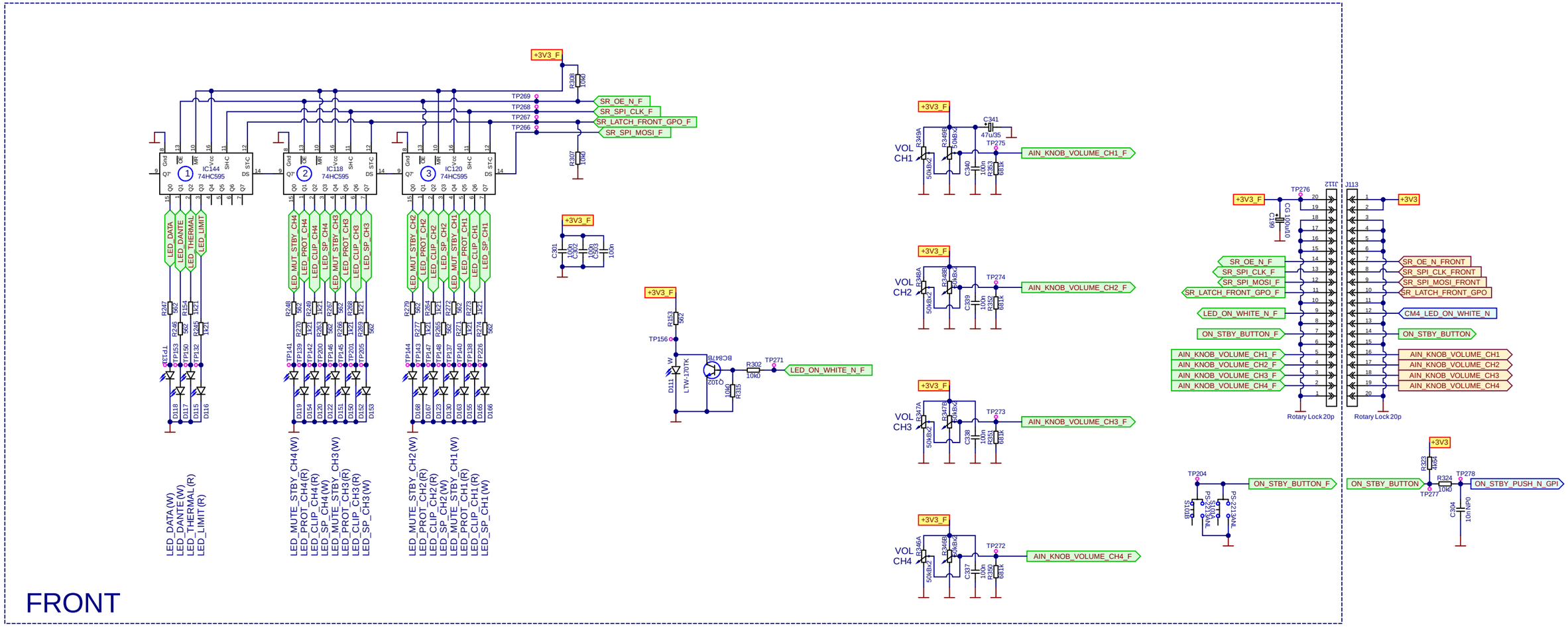

ecler	drawn by: T. Lozano	date: 230724	approved: D. Mele
	project n: EP04-20	title: Front Panel Prototype 3	
	product n: VIDA Series		
number: 10.1264	version: 03.02	page: 7 of 7	

Power Supply
Front Panel
RP-CM4, RTC & uSD
i.MRXT & PLL

Power Supply

Power Amp <=> SMPS

Power Amp <=> In+Control

Internal Circuit

ecler	drawn by:	N. Galera	date:	230724	approved: D. Mele
	project n:	EP04-20	title:	Power Amp & I.Sense (CH1 & 2) Prototype 4	
	product n:	VIDA Series			
number: 10.1265	version: 03.04	page: 1 of 4			

CI101 Ct. Amp 11.1697

MP101

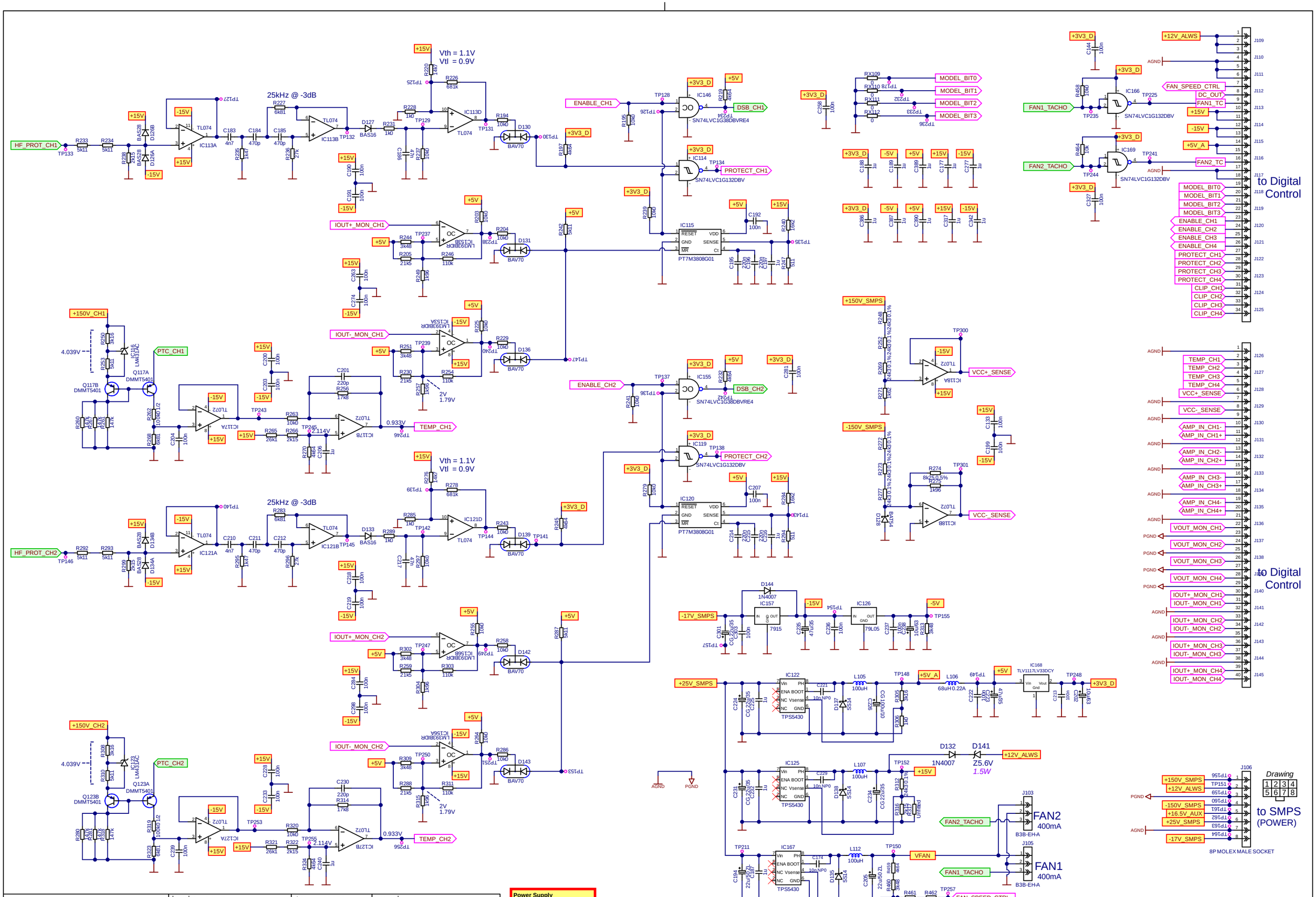

drawn by: N. Galera	date: 230724	approved: D. Mele	
project n: EP04-20	title: AMP Protect & PS (CH1 & 2) Prototype 4		
product n: VIDA Series			
number: 10.1265	version: 03.03	page: 2 of 4	

Power Supply

Power Amp <=> SMPS

Power Amp <=> In+Control

Internal Circuit

ecler	drawn by: N. Galera	date: 230724	approved: D. Mele		
	project n: EP04-20	title: Power Amp & I.Sense (CH3 & 4) Prototype 4			
	product n: VIDA Series				
number: 10.1265	version: 03.04	page: 3 of 4			

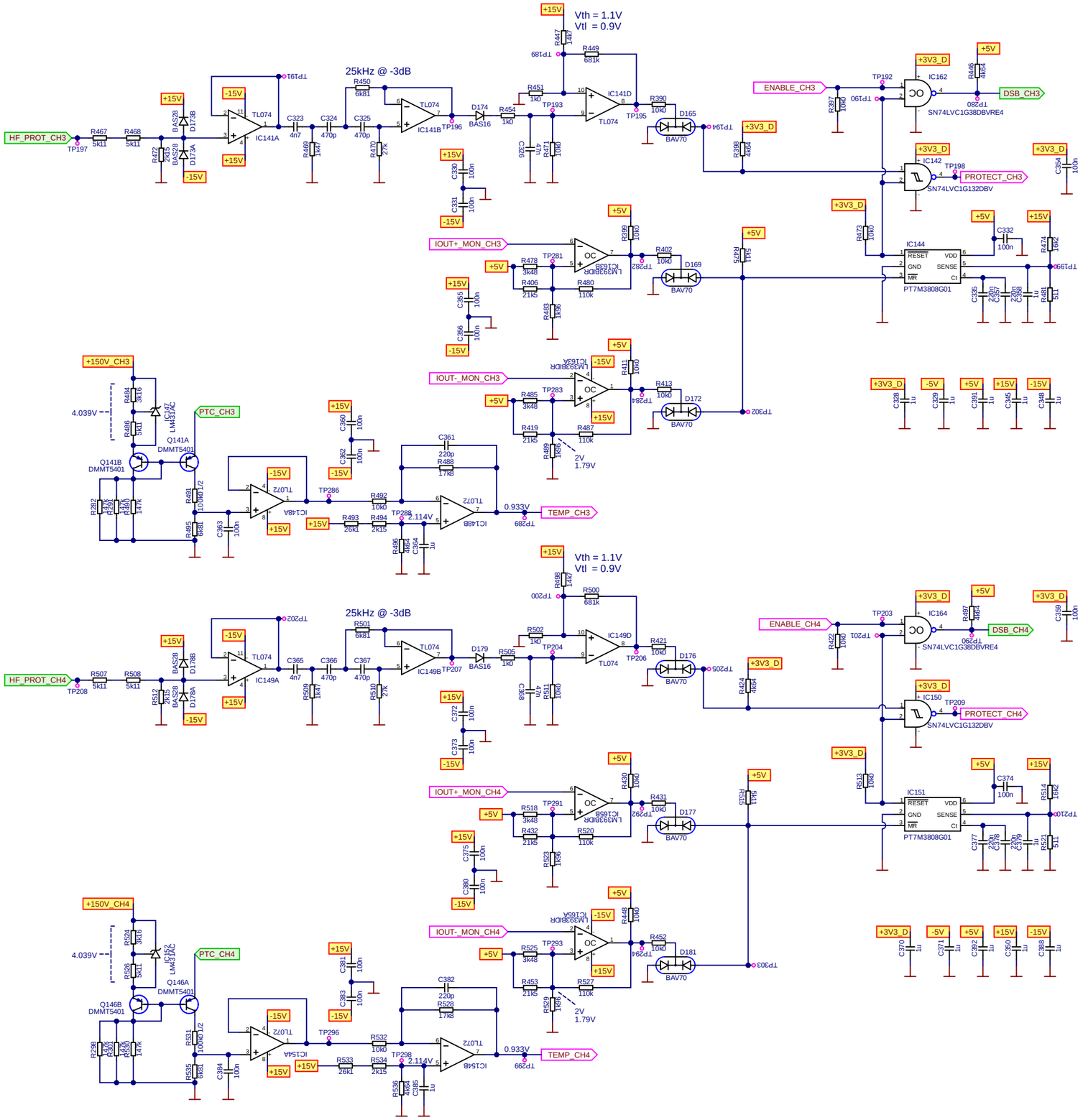

drawn by: N. Galera	date: 230724	approved: D. Mele	
project n: EP04-20	title: AMP Protect (CH3 & 4) Prototype 4		
product n: VIDA Series			
number: 10.1265	version: 03.04	page: 4 of 4	

- Power Supply
- Power Amp <=> SMPS
- Power Amp <=> In+Control
- Internal Circuit

HS101
Heatsink PL003754

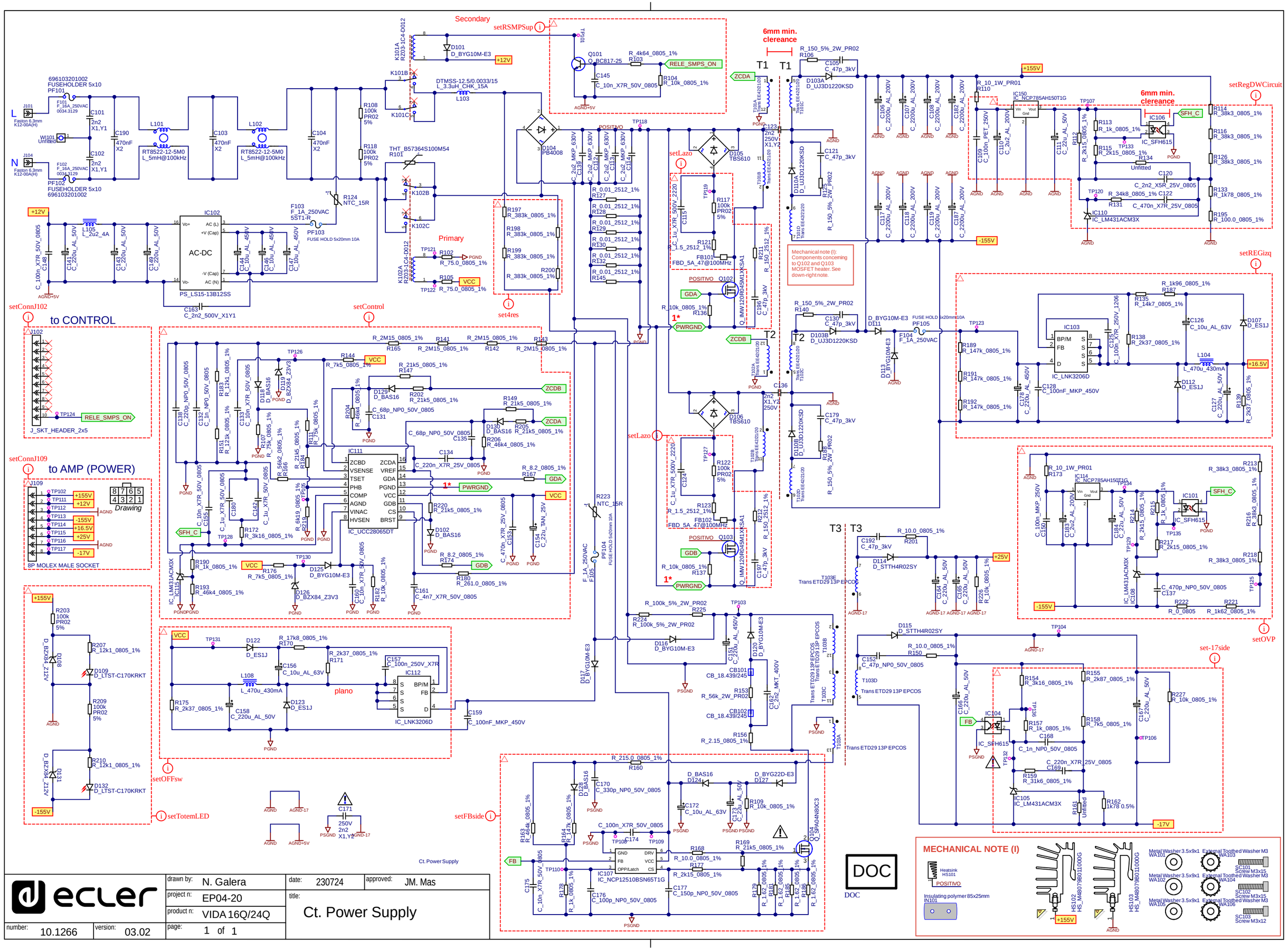

ecler	drawn by:	N. Galera	date:	230724	approved: JM. Mas
	project n:	EP04-20	title:	Ct. Power Supply	
	product n:	VIDA 16Q/24Q			
number: 10.1266	version: 03.02	page: 1 of 1			

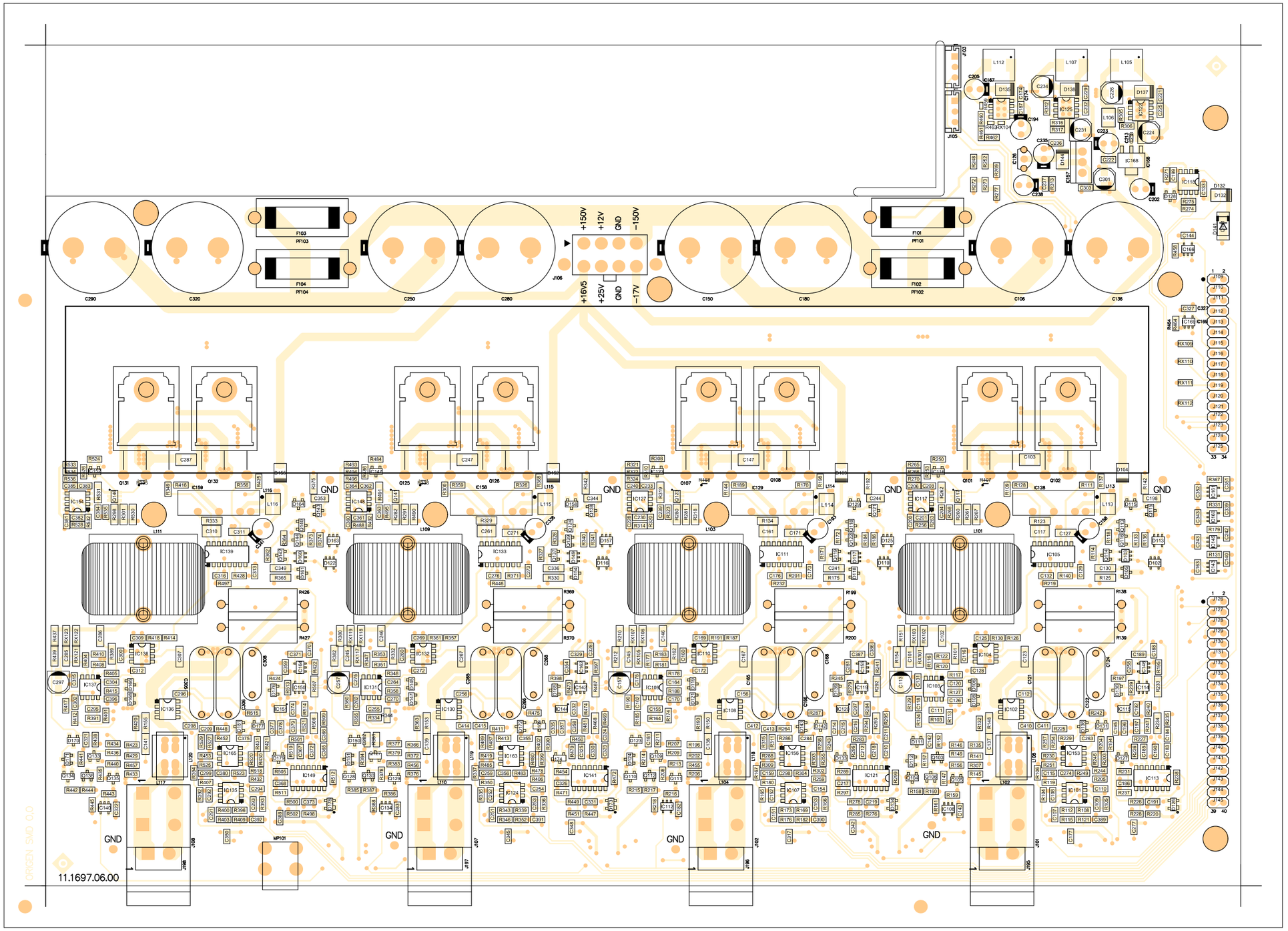

ecler	related to: circuit no: 11.1697.06.00 schema no: 10.1265.03.04 insertion file no: 81.0338.05.02	side: Component view: Reference	
number: 33.1663	version: 06.03	project n: EP04-20	title: Power Amp Ct.
drawn by: A. Sanz	date: 230724	product n: VIDA Series	
		approved: Mingo Mele	

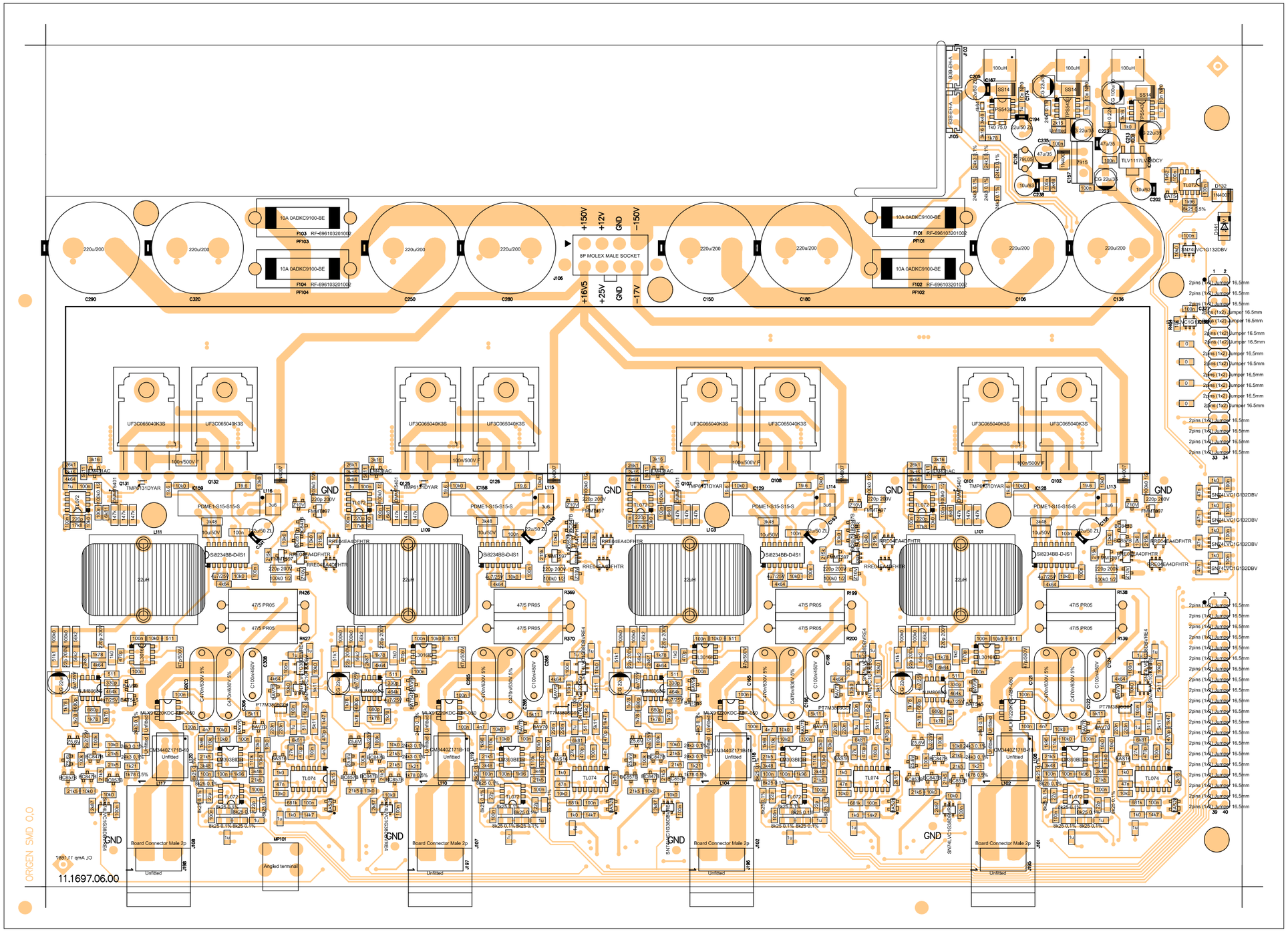

ecler	related to: circuit no: 11.1697.06.00 schema no: 10.1265.03.04 insertion file no: 81.0338.05.02	side: Component view: Value	
number: 33.1664	version: 06.03	project n: EP04-20	title: Power Amp Ct.
drawn by: A. Sanz	date: 230724	product n: VIDA Series	
		approved: Mingo Mele	

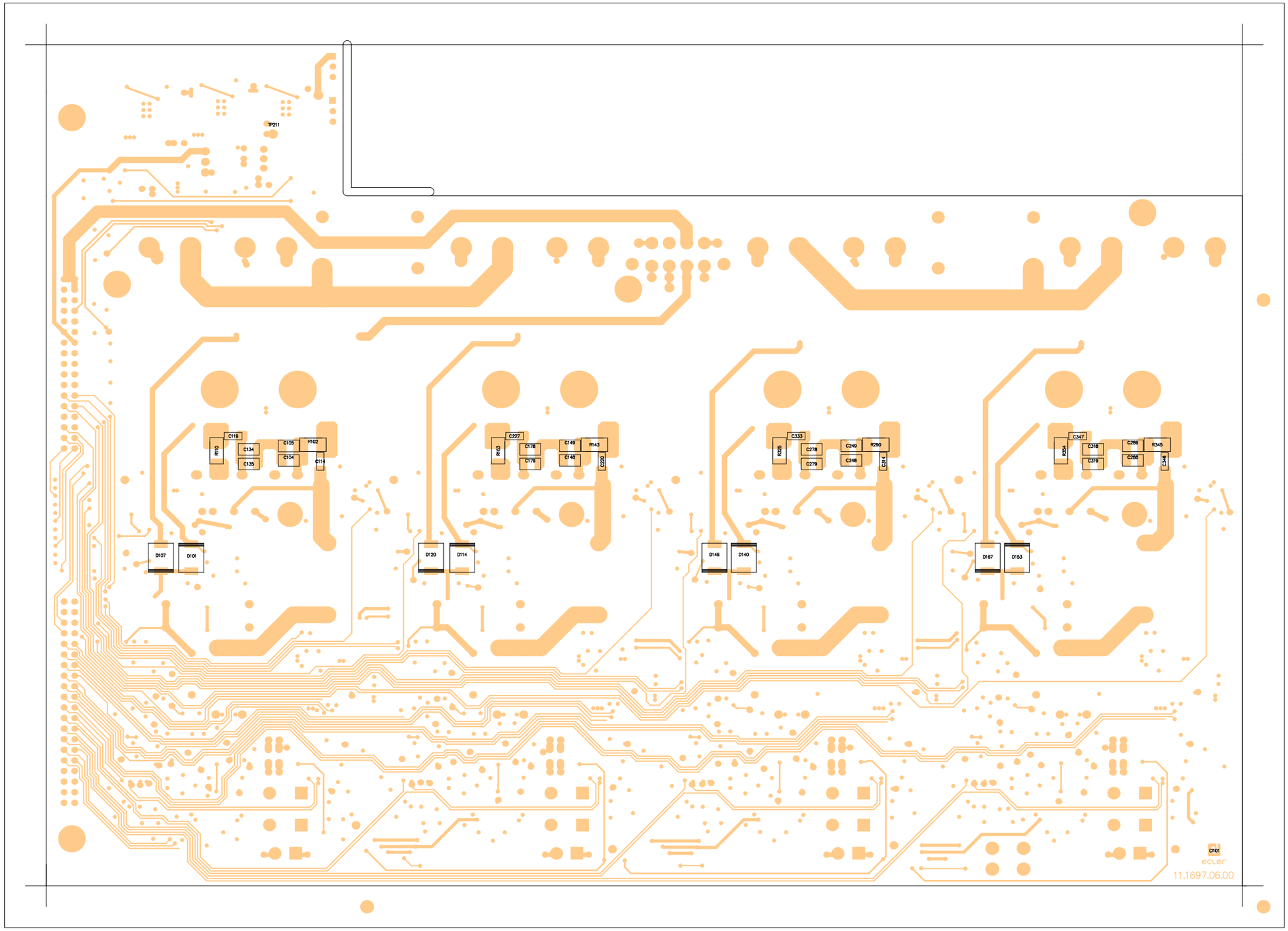

ecler	related to: circuit no: 11.1697.06.00 schema no: 10.1265.03.04 insertion file no: 81.0338.05.02	side: Solder view: Reference	
number: 33.1665	version: 06.03	project n: EP04-20	title: Power Amp Ct.
drawn by: A. Sanz	date: 230724	product n: VIDA Series	
		approved: Mingo Mele	

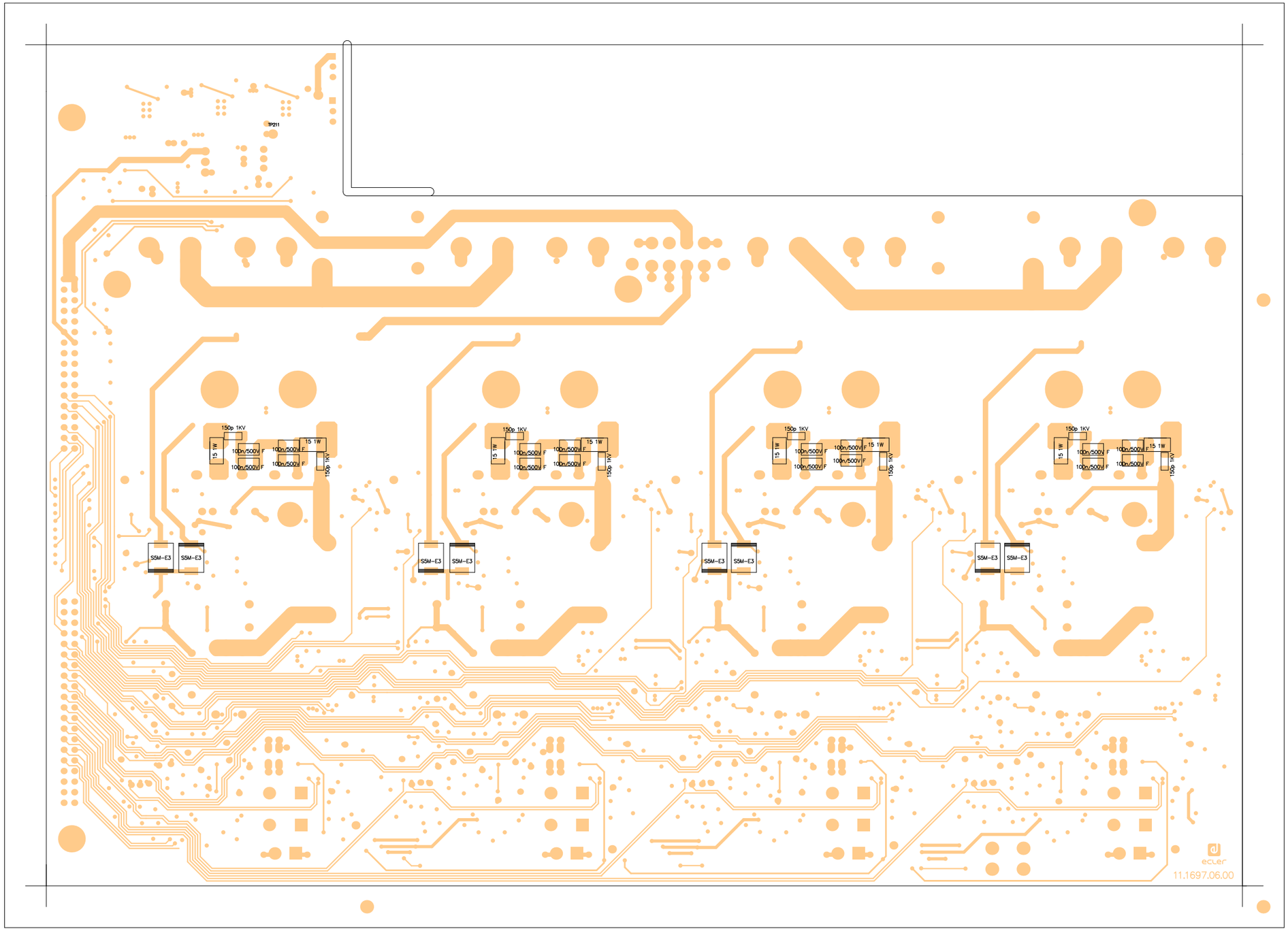

ecler	related to: circuit no: 11.1697.06.00 schema no: 10.1265.03.04 insertion file no: 81.0338.05.02	side: Solder view: Value	
number: 33.1666	version: 06.03	project n: EP04-20	title: Power Amp Ct.
drawn by: A. Sanz	date: 230724	product n: VIDA Series	
		approved: Mingo Mele	

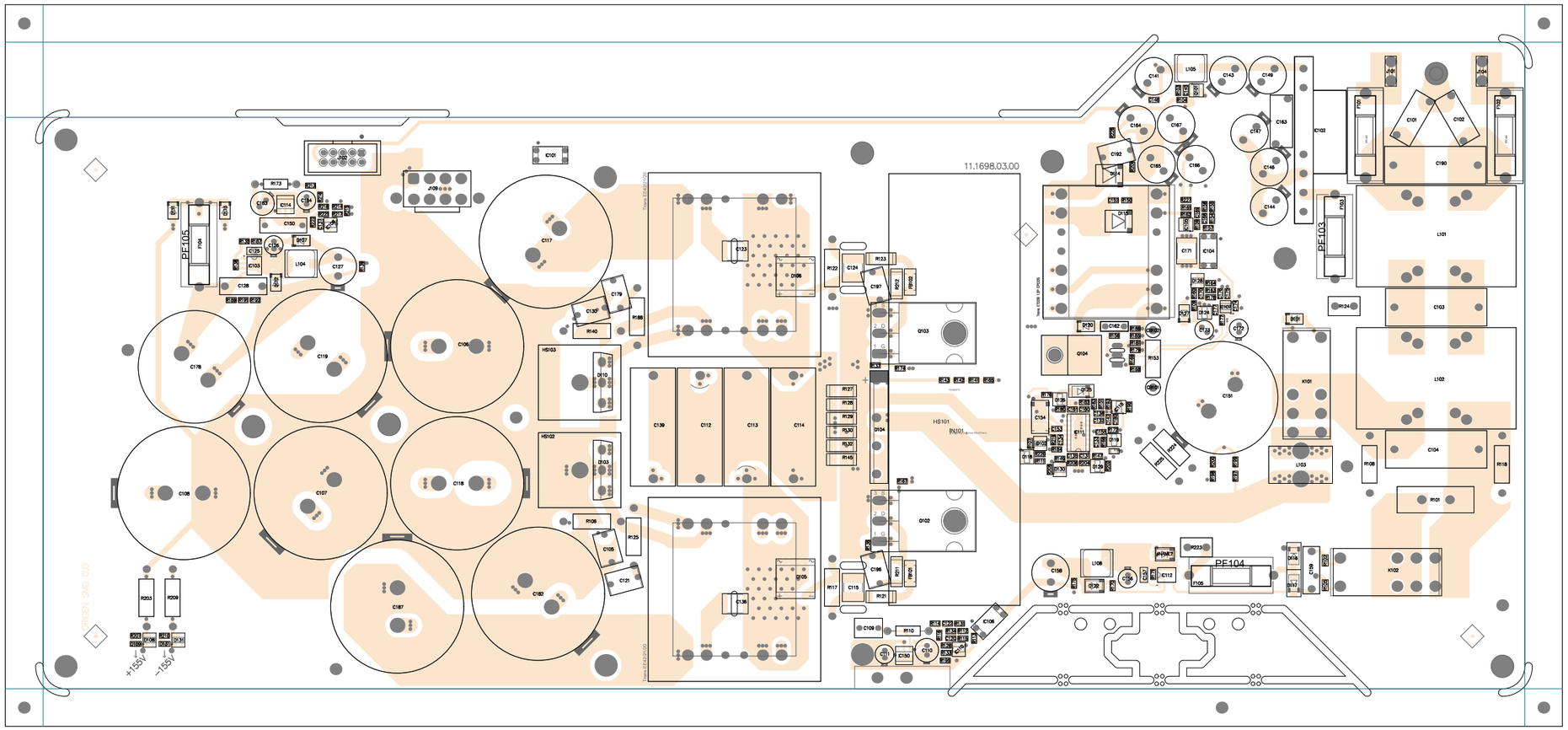

ecler		related to: circuit no: 11.1698.03.00 schema no: 10.1266.03.02 insertion file no: 81.0340.03.00		side: Component view: Reference	
number: 33.1669	version: 03.02	project n: EP04-20	title: VIDA16Q/24Q-PSU		
drawn by: A. Bolet	date: 230724	product n: VIDA-16Q/24Q			
		approved: J.M. Mas			

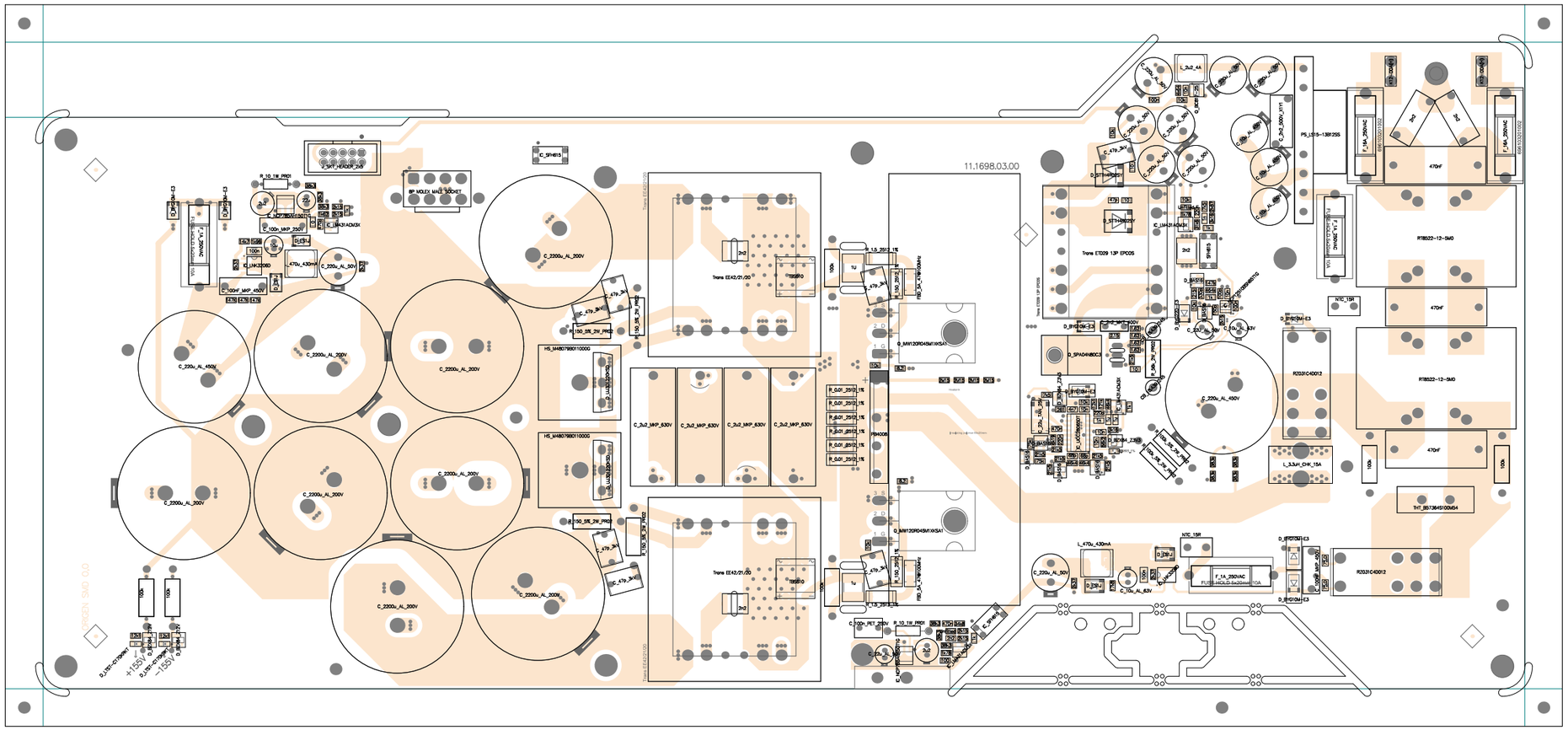
11.1698.03.00
Trans ETD29 13P EPC25
Trans EE42/21/20
C_2200u_AL_200V
C_220u_AL_450V
C_2u2_MKP_630V
C_220u_AL_50V
C_220u_AL_63V
470nF
RT8522-12-SM0
R2031C4D012
PS_L015-13R25S
FUSE-HOLD-5x20mm
F_1A_250VAC
NTC_10R
L_3,3uH_CHK_15A
L_47Ou_430mA
THT_B57364S1000M54
FB4008
Q_IMW120R045M1XKSA1
Q_STTH1R06ZY
Q_SPA04N80C3
Q_IPD50R380CE
Q_IPA60R190CE
Q_IPA60R800CE
Q_IPA60R360CE
Q_IPA60R650CE
Q_IPA60R280CE
Q_IPA60R600CE
D_BYG10M-E3
D_BYG20M-E3
D_BYG20J-E3
D_BYG10J-E3
D_BYG10D-E3
D_BYG20D-E3
D_BYG10G-E3
D_BYG20G-E3
D_BYG10K-E3
D_BYG20K-E3
D_STPS20M60SG
D_STPS30M60SG
D_STPS40M60CG
D_STPS60M60CT
D_STPS80M60CT
D_STPS30M60SF
D_STPS40M60CF
D_STPS60M60CTF
D_STPS80M60CTF
D_STPS30M60SFP
D_STPS40M60CFP
D_STPS60M60CTFP
D_STPS80M60CTFP
D_SBR20U60P5-13
D_SBR30U60P5-13
D_SBR40U60P5-13
D_SBR60U60P5-13
D_SBR80U60P5-13
D_SBR30U60CTFP
D_SBR40U60CTFP
D_SBR60U60CTFP
D_SBR80U60CTFP
D_SBR30U60CT
D_SBR40U60CT
D_SBR60U60CT
D_SBR80U60CT
D_SBR30U60P5
D_SBR40U60P5
D_SBR60U60P5
D_SBR80U60P5
D_SBR30U60CTFP-13
D_SBR40U60CTFP-13
D_SBR60U60CTFP-13
D_SBR80U60CTFP-13
D_SBR30U60CT-13
D_SBR40U60CT-13
D_SBR60U60CT-13
D_SBR80U60CT-13
D_SBR30U60P5-13
D_SBR40U60P5-13
D_SBR60U60P5-13
D_SBR80U60P5-13

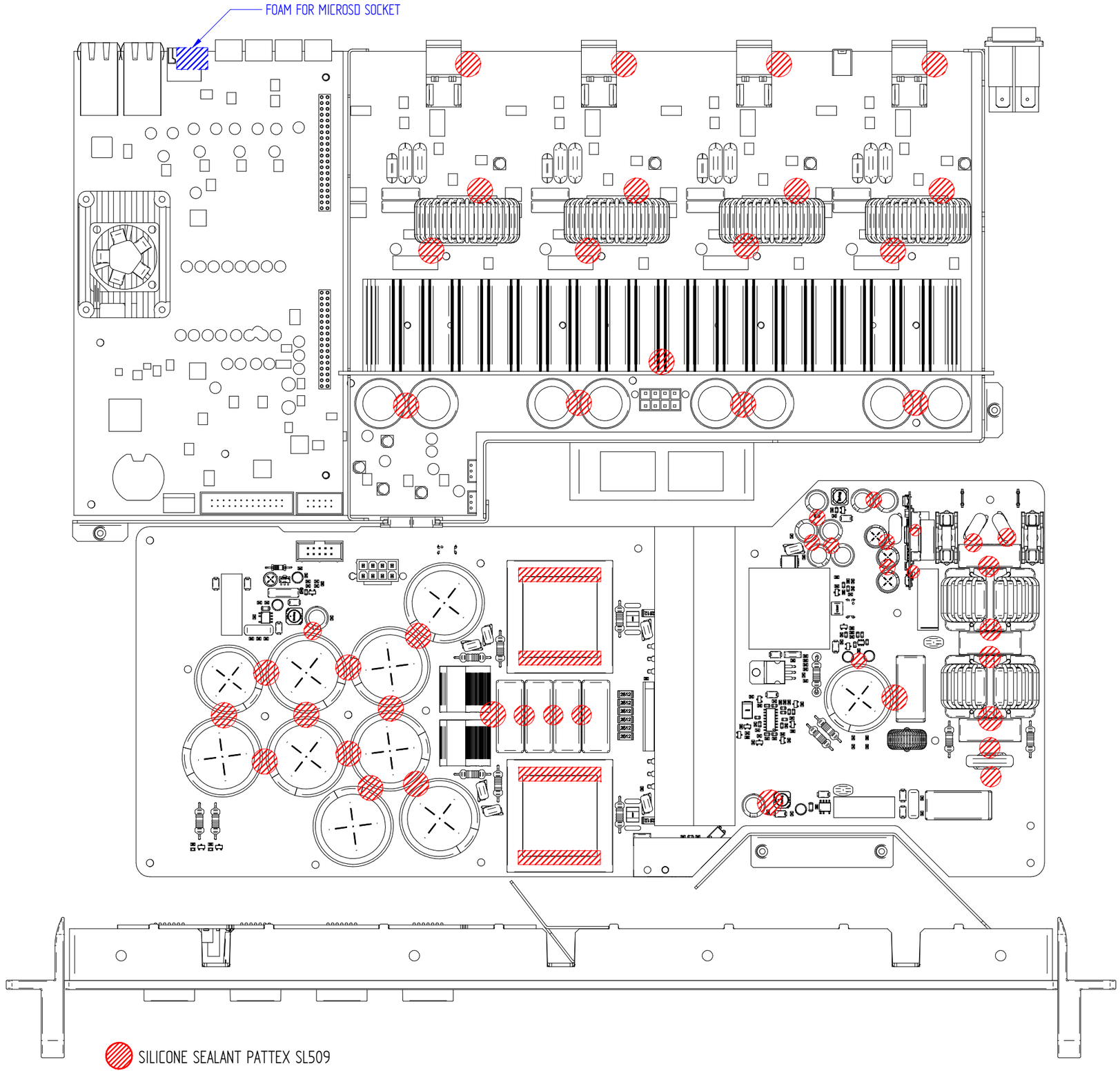

ecler	drawn: Jordi Folch	date: 230526	project: EP04-20	product: VIDA16Q/24Q
number: 33.1717 version: 01.01	approved:	title: **GLUE POINTS**		

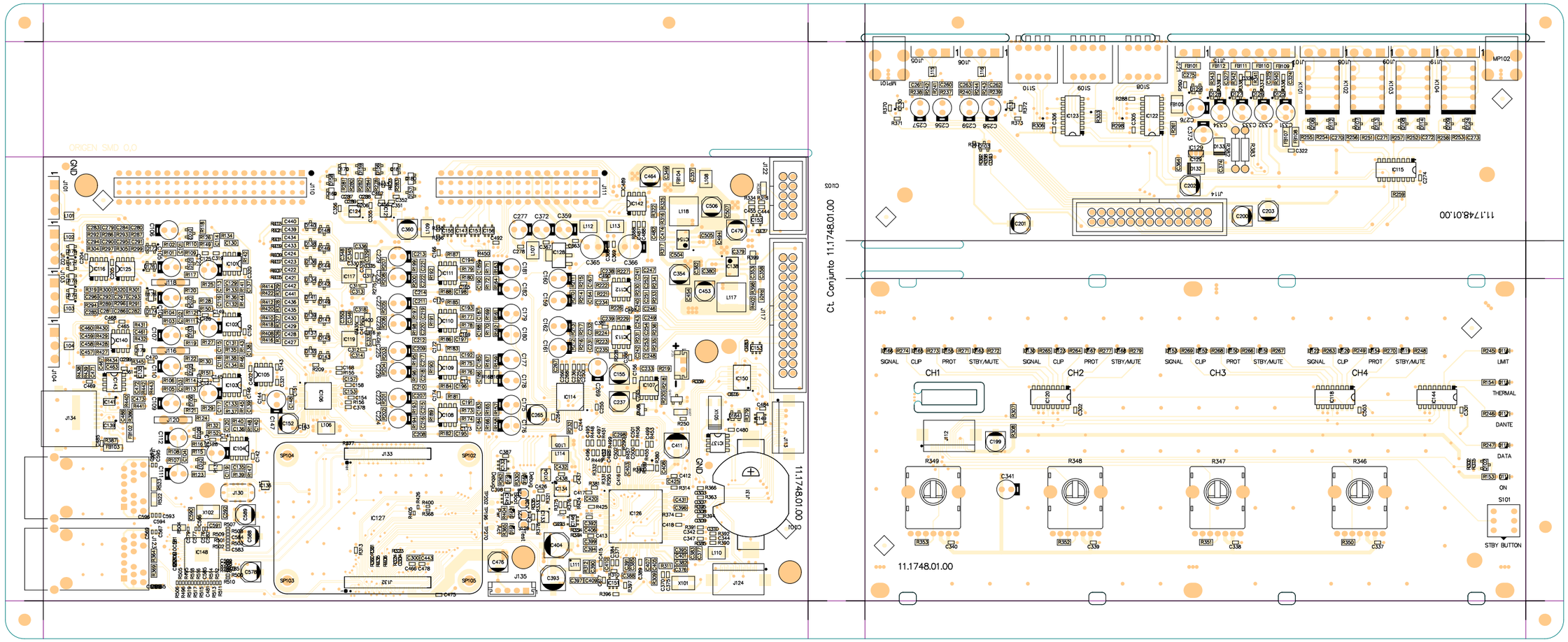

ecler	related to: circuit no: 11.1748.01.00 schema no: 10.1264.03.03 insertion file no: 81.0361.02.02	side: Component view: Reference	
number: 33.1718	version: 03.03	project n: EP04-20	title: Digital Control Base Ct. + Frontal Ct. + Posterior Ct.
drawn by: N Galera	date: 230927	approved: Mingo Mele	product n: VIDA Series

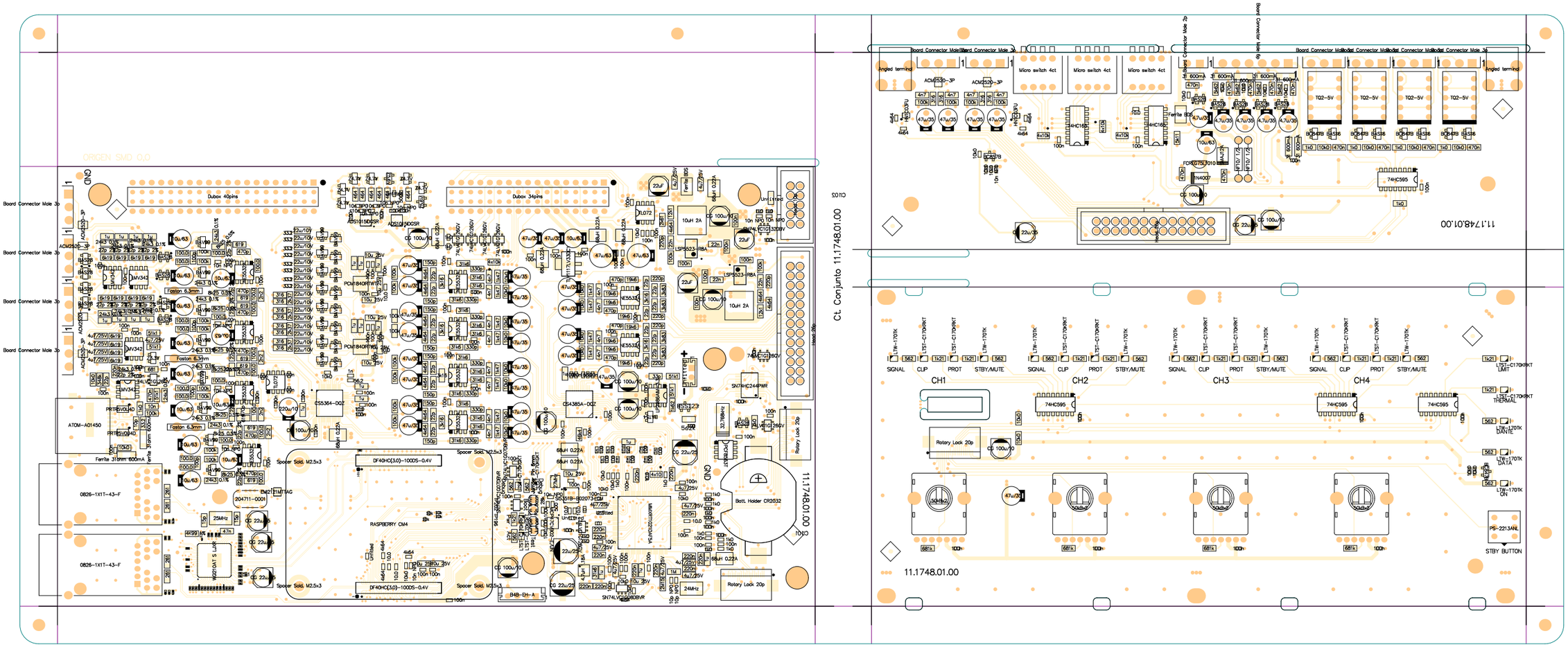

ecler	related to: circuit no: 11.1748.01.00; schema no: 10.1264.03.03; insertion file no: 81.0361.02.02	side: Component	
		view: Value	
	project n: EP04-20	title: Digital Control Base Ct. + Frontal Ct. + Posterior Ct.	
number: 33.1719	version: 03.03	product n: VIDA Series	
drawn by: N Galera	date: 230927	approved: Mingo Mele	

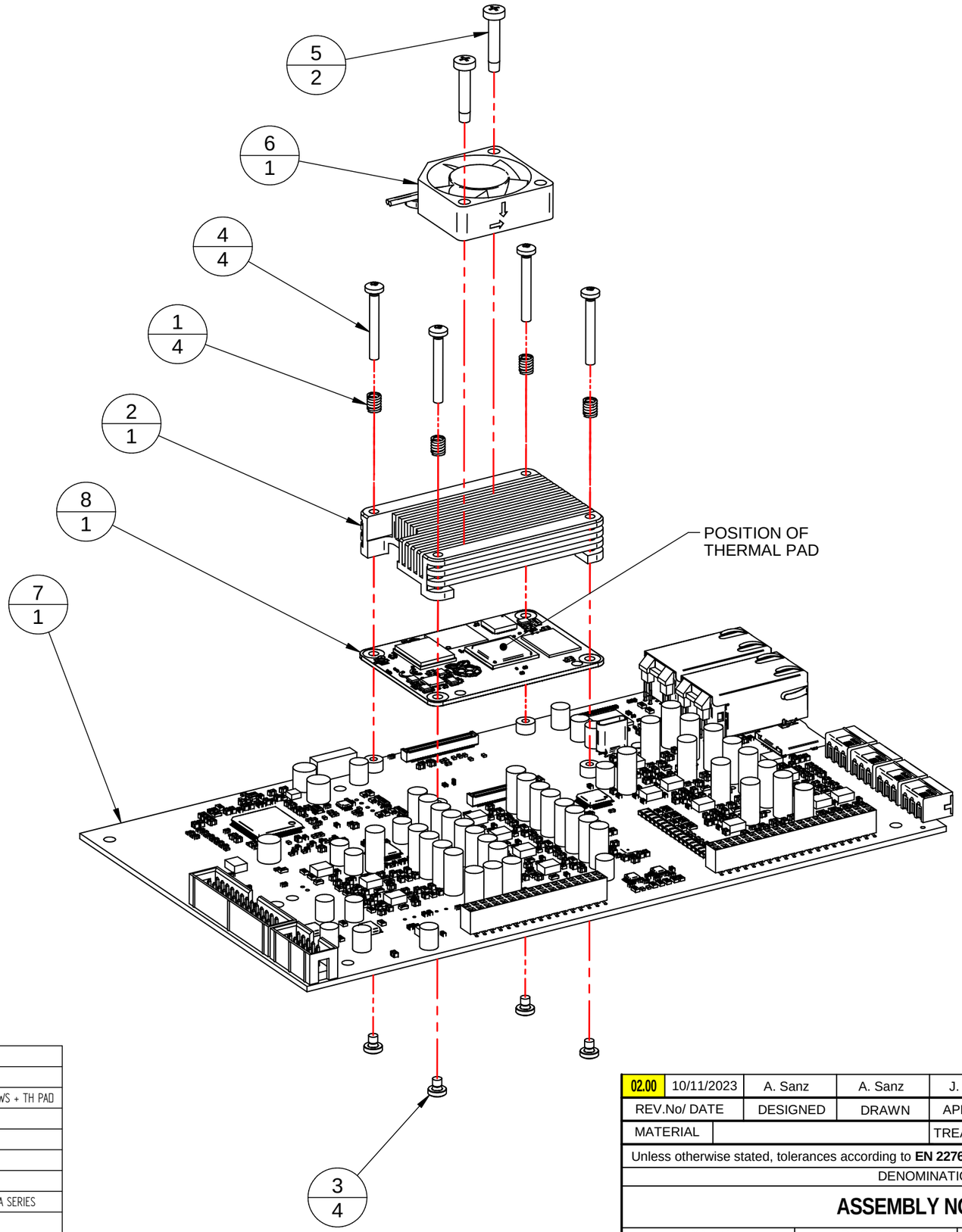

Nº	Qty.	Code	Description
1	4	FCMUELLE3000	SPRING 3.76x6.35 FOR M2.5
2	1	FCRAD8990000	RASPBERRY PI ALU HEATSINK + SCREWS + TH PAD
3	4	FCT750250300	SCREW DIN7985 M2.5x3
4	4	FCT750252000	SCREW DIN7985 M2.5x20
5	2	FCT850301600	SCREW M3x16 TRILOBULAR WHITE
6	1	FCVEN0300000	FAN 30x30 12VDC
7	1	FINS01117480	CONTROL + PERIPHERAL CIRCUITS VIDA SERIES
8	1	FRMODUCM4001	RASPBERRY

02.00	10/11/2023	A. Sanz	A. Sanz	J. Folch	Heatsink fix is changed
REV.No/ DATE		DESIGNED	DRAWN	APPROVAL	MODIFICATION

MATERIAL		TREATMENT1	TREATMENT2

Unless otherwise stated, tolerances according to **EN 22768-mK**

ecler
C/ MOTORS 166-168, BARCELONA

DENOMINATION	SCALE	CODE
ASSEMBLY NOTES	1:1,25	FINS01117480

PROJECT	PRODUCT	DRAWING No	SHEET
VIDA	VIDA SERIES	33.1767	1/1

This document is property of Neec Audio Barcelona, Spain. It cannot be copied, reproduced or given to third parties without express authorization.

PARTS LIST: Ct. Amplificador 11.1697.06.00

Q	Code	Description	Reference	
4	FCXC60220010	22p 200V	C101, C145, C245, C285	SMD
12	FCXC62200010	220p 200V	C102, C130, C146, C198, C241, C244, C246, C286, C336, C344, C349, C353	SMD
20	FCXC71000321	100n/500V F	C103, C104, C105, C134, C135, C147, C148, C149, C178, C179, C247, C248, C249, C278, C279, C287, C288, C289, C318, C319	SMD
8	FCCE36002200	220u/200	C106, C136, C150, C180, C250, C280, C290, C320	CONV
83	FCXCD4100000	100n	C107, C110, C112, C115, C125, C128, C129, C133, C140, C143, C144, C151, C154, C156, C159, C169, C172, C173, C182, C190, C191, C192, C199, C200, C203, C204, C207, C208, C218, C219, C222, C228, C233, C236, C237, C239, C242, C251, C254, C256, C258, C259, C263, C269, C272, C273, C274, C281, C283, C284, C291, C294, C296, C298, C299, C303, C309, C312, C313, C322, C327, C330, C331, C332, C339, C351, C354, C355, C356, C359, C360, C362, C363, C372, C373, C374, C375, C380, C381, C383, C384, C410, C412, C414	SMD
8	FCXCD1220000	22p	C108, C109, C152, C153, C252, C253, C292, C293	SMD
8	FCXCD2680000	680p	C111, C118, C155, C162, C255, C262, C295, C302	SMD
8	FCCEZ1502235	CG 22u/35	C113, C157, C224, C231, C234, C257, C297, C301	SMD
8	FCXC61500000	150p 1KV	C114, C119, C220, C227, C314, C333, C346, C347	SMD
12	FCXCD2470000	470p	C116, C160, C184, C185, C211, C212, C260, C300, C324, C325, C366, C367	SMD
4	FCXCD4001050	10u/50V	C117, C161, C261, C310	SMD
4	FCXCD2330000	330p	C120, C164, C264, C304	SMD
8	FCCCD4706300	C470n/630V 5%	C121, C122, C165, C166, C265, C266, C305, C306	CONV
4	FCXC60470010	47p/500V	C123, C167, C267, C307	SMD
4	FCCCD1004500	C100n/450V	C124, C168, C268, C308	CONV
12	FCXCD4004720	4u7/25V	C126, C131, C132, C170, C175, C176, C270, C275, C276, C315, C316, C396	SMD
4	FCXCN4100000	100n	C127, C171, C271, C311	SMD
4	FCXCD4002220	2u2/25V	C142, C181, C282, C321	SMD
6	FCCE25022000	22u/50 ZL	C158, C193, C194, C205, C338, C341	CONV

8	FCXCD4047000	47n	C163, C186, C217, C243, C326, C343, C352, C368	SMD
3	FCXCD4010050	10n NP0	C174, C221, C229	SMD
31	FCXCD4001020	1u	C177, C187, C188, C189, C197, C206, C216, C225, C232, C240, C277, C317, C328, C329, C342, C345, C348, C350, C358, C364, C370, C371, C379, C385, C386, C387, C388, C389, C390, C391, C392	SMD
8	FCXCD4004700	4n7	C183, C209, C210, C323, C365, C411, C413, C415	SMD
8	FCXCD4220000	220n	C195, C196, C214, C215, C335, C357, C377, C378	SMD
4	FCXCD2220000	220p	C201, C230, C361, C382	SMD
2	FCCE25010000	10u/63	C202, C238	CONV
1	FCXCC2100000	100n	C213	SMD
2	FCCE10000000	47u/35	C223, C235	CONV
1	FCCEZ1510010	CG 100u/10	C226	SMD
1	FCCI01697000	Ct. Amp 11.1697	CI101	CONV
8	FCXDDS5M0000	S5M-E3	D101, D107, D114, D120, D140, D146, D153, D167	SMD
12	FCIC04EA4000	RRE04EA4DFHTR	D102, D103, D110, D113, D116, D117, D122, D125, D149, D157, D160, D163	SMD
6	FCXDD4007000	1N4007	D104, D109, D132, D144, D152, D155	SMD
8	FCXZ00010000	Z10V	D105, D115, D118, D129, D154, D158, D161, D164	SMD
4	FCXDDBAV9900	BAV99	D106, D119, D145, D166	SMD
4	FCXDDBAT5500	BAT54S	D108, D121, D147, D168	SMD
8	FCXZ00005600	Z5.6V	D111, D112, D123, D124, D150, D151, D170, D171	SMD
4	FCXDDBAS2800	BAS28	D126, D134, D173, D178	SMD
4	FCXDDBAS1600	BAS16	D127, D133, D174, D179	SMD
1	FCXDDBAT5400	BAT54	D128	SMD
12	FCXDDBAV7000	BAV70	D130, D131, D136, D139, D142, D143, D165, D169, D172, D176, D177, D181	SMD
3	FCXDDSB14000	SS14	D135, D137, D138	SMD
1	FCDD10056000	Z5.6V	D141	SMD
4	FCFUS5017000	10A 0ADKC9100-BE	F101, F102, F103, F104	CONV
1	FCRAD8970000	Heatsink PL003754	HS101	CONV
9	FCIC07201000	TL072	IC101, IC107, IC117, IC118, IC124, IC127, IC135, IC148, IC154	SMD
4	FCIC91220000	MLX91220KDC-ABF-050	IC102, IC108, IC130, IC136	SMD
4	FCIC80680000	NJM8068G	IC103, IC109, IC131, IC137	SMD
4	FCIC30160000	TL3016ID	IC104, IC110, IC132, IC138	SMD
4	FCIC82340000	Si8234BB-D-IS1	IC105, IC111, IC133, IC139	SMD

8	FCIC74LVC1G3	SN74LVC1G38DBVRE4	IC106, IC112, IC134, IC140, IC146, IC155, IC162, IC164	SMD
4	FCIC07401000	TL074	IC113, IC121, IC141, IC149	SMD
9	FCIC74LVC1G1	SN74LVC1G132DBV	IC114, IC119, IC142, IC143, IC145, IC150, IC160, IC161, IC166, IC169	SMD
4	FCIC03808000	PT7M3808G01	IC115, IC120, IC144, IC151	SMD
4	FCIC43101000	LM431AC	IC116, IC123, IC147, IC152	SMD
3	FCIC05430010	TPS5430	IC122, IC125, IC167	SMD
1	FCREG79L0500	79L05	IC126	CONV
4	FCFONT015150	PDME1-S15-S15-S	IC128, IC129, IC158, IC159	CONV
4	FCIC393B0000	LM393BIDR	IC153, IC156, IC163, IC165	SMD
1	FCREG7915000	7915	IC157	CONV
1	FCIC01117L00	TLV1117LV33DCY	IC168	SMD
4	FCREG1018000	Board Connector Male 2p	J101, J102, J107, J108	CONV
1	FCCTM0003000	B3B-EH-A	J103, J105	CONV
1	FCCTAMP08000	8P MOLEX MALE SOCKET	J106	CONV
37	FCTERMG12M16	2pins (1x2) Jumper 16.5mm	J109, J110, J111, J112, J113, J114, J115, J116, J117, J118, J119, J120, J121, J122, J123, J124, J125, J126, J127, J128, J129, J130, J131, J132, J133, J134, J135, J136, J137, J138, J139, J140, J141, J142, J143, J144, J145	CONV
4	FCBB00100000	22uH	L101, L103, L109, L111	CONV
3	FCCHKX100000	100uH	L105, L107, L112	SMD
1	FCCHKX068000	68uH 0.22A	L106	SMD
4	FCCHK1100B10	CM3440Z171B-10	L108, L118, L119, L120	CONV
4	FCCHKX360000	3,6uH	L113, L114, L115, L116	SMD
1	FCSUJ3010000	Angled terminal	MP101	CONV
4	FCPORF317000	696103201002	PF101, PF102, PF103, PF104	CONV
8	FCTR06504000	UF3C065040K3S	Q101, Q102, Q107, Q108, Q125, Q126, Q131, Q132	CONV
12	FCXTT0847000	BC847B	Q103, Q106, Q109, Q112, Q113, Q118, Q124, Q127, Q130, Q133, Q136, Q140	SMD
12	FCXTT0857000	BC857B	Q104, Q105, Q110, Q111, Q116, Q122, Q128, Q129, Q134, Q135, Q139, Q144	SMD
4	FCXTT0597000	FMMT597	Q114, Q119, Q137, Q142	SMD
4	FCXTT0497000	FMMT497	Q115, Q121, Q138, Q143	SMD
4	FCIC05401000	DMMT5401	Q117, Q123, Q141, Q146	SMD
4	FCXR13100000	1k0	R101, R162, R332, R389	SMD
8	FCXR80150015	15 1W	R102, R110, R143, R163, R290, R325, R345, R354	SMD

21	FCXR53178000	1k78	R103, R113, R122, R124, R129, R164, R174, R183, R185, R190, R334, R344, R353, R355, R360, R391, R401, R410, R412, R417, R462	SMD
32	FCXR73825000	8k25 0.1%	R104, R105, R106, R108, R112, R115, R119, R121, R165, R166, R167, R169, R173, R176, R180, R182, R335, R336, R337, R339, R343, R346, R350, R352, R392, R393, R394, R396, R400, R403, R407, R409	SMD
4	FCXPTC613100	TMP6131DYAR	R107, R168, R338, R395	SMD
8	FCXR51196000	19.6	R109, R111, R144, R170, R300, R326, R349, R356	SMD
8	FCXR55215000	215k	R114, R136, R171, R186, R327, R341, R362, R374	SMD
8	FCXR53287000	2k87	R116, R161, R177, R218, R347, R388, R404, R445	SMD
12	FCXR52511000	511	R117, R126, R178, R187, R247, R294, R348, R357, R405, R414, R481, R521	SMD
73	FCXR54100000	10k0	R118, R128, R130, R133, R137, R140, R146, R159, R160, R172, R184, R189, R191, R194, R195, R198, R201, R203, R204, R207, R216, R217, R225, R229, R237, R239, R241, R243, R255, R258, R263, R264, R279, R286, R297, R320, R328, R340, R359, R361, R364, R368, R371, R373, R377, R386, R387, R390, R397, R399, R402, R411, R413, R416, R418, R421, R422, R425, R428, R430, R431, R434, R443, R444, R448, R452, R458, R464, R471, R473, R492, R511, R513, R532	SMD
16	FCXR53464000	4k64	R120, R181, R197, R219, R232, R245, R270, R324, R351, R398, R408, R424, R446, R496, R497, R536	SMD
4	FCXR13348000	3k48	R123, R134, R329, R333	SMD
12	FCXR15100010	100k0 1/2	R125, R142, R175, R192, R262, R319, R330, R342, R365, R375, R491, R531	SMD
4	FCXR55464000	464k	R127, R188, R358, R415	SMD
13	FCXR53100000	1k0	R131, R179, R228, R231, R285, R289, R306, R331, R367, R451, R454, R502, R505	SMD
19	FCXR54243001	24k3 0.1%	R132, R135, R141, R193, R196, R202, R248, R252, R269, R272, R273, R277, R312, R363, R366, R372, R420, R423, R429	SMD

8	Consultar	47/5 PR05	R138, R139, R199, R200, R369, R370, R426, R427	CONV
4	FCXR63178000	1k78 0.5%	R145, R206, R376, R433	SMD
24	FCXR54215000	21k5	R147, R149, R156, R158, R205, R208, R209, R213, R215, R230, R259, R288, R378, R379, R383, R385, R406, R419, R432, R435, R436, R440, R442, R453	SMD
8	FCXR15100000	100k0	R151, R210, R380, R437, RX103, RX107, RX119, RX123	SMD
8	FCXR55100000	100k	R152, R157, R211, R214, R381, R384, R438, R441	SMD
4	FCXR14511000	51k1	R154, R212, R382, R439	SMD
4	FCXR54147000	14k7	R220, R276, R447, R498	SMD
4	FCXR55681000	681k	R226, R278, R449, R500	SMD
8	FCXR53681000	6k81	R227, R268, R283, R323, R450, R495, R501, R535	SMD
8	FCXR13511000	5k11	R233, R234, R292, R293, R467, R468, R507, R508	SMD
4	FCXR53147000	1k47	R235, R295, R469, R509	SMD
4	FCXR54270000	27k	R236, R296, R470, R510	SMD
9	FCXR53215000	2k15	R238, R266, R299, R316, R322, R472, R494, R512, R534	SMD
4	FCXR54162000	16k2	R240, R284, R474, R514	SMD
8	FCXR53511000	5k11	R242, R253, R287, R310, R475, R486, R515, R526	SMD
10	FCXR53348000	3k48	R244, R251, R302, R309, R313, R460, R478, R485, R518, R525	SMD
8	FCXR55110000	110k	R246, R254, R303, R311, R480, R487, R520, R527	SMD
9	FCXR53196000	1k96	R249, R257, R275, R304, R315, R483, R489, R523, R529	SMD
6	FCXR53316000	3k16	R250, R305, R308, R461, R484, R524	SMD
4	FCXR54178000	17k8	R256, R314, R488, R528	SMD
12	FCXR15147000	147k	R260, R261, R267, R280, R281, R282, R291, R298, R301, R318, R490, R530	SMD
4	FCXR54261000	26k1	R265, R321, R493, R533	SMD
1	FCXR53162000	1k62	R271	SMD
1	FCXR63825000	8k25 0.5%	R274	SMD
4	FCXR53121000	1k21	R307, R455, R456, R457	SMD
1	FCXR53464010	4k64	R459	SMD
1	FCXR63100010	1k0	R463	SMD
8	FCXR14562000	56k2	RX101, RX102, RX105, RX106, RX117, RX118, RX121, RX122	SMD
1	FCXR30750000	75.0	RX104	SMD
4	FCXR50000000	0	RX109, RX110, RX111, RX112	SMD

PARTS LIST: Ct. Fuente 11.1698.03.00

Q	Code	Description	Reference		
2	FCCCD2225000	2n2	C101, C102		CONV
3	FCCDH7147000	470nF	C103, C104, C190		CONV
7	FCCCD4710000	C_47p_3kV	C105, C121, C130, C179, C192, C196, C197		CONV
8	FCCE36022000	C_2200u_AL_200V	C106, C107, C108, C117, C118, C119, C182, C187		CONV
1	FCCCD0100250	C_100n_PET_250V	C109		CONV
2	FCCE36000022	C_2u2_AL_200V	C110, C183		CONV
3	FCCE25022000	C_22u_AL_50V	C111, C173, C184		CONV
4	FCCCP0220063	C_2u2_MKP_630V	C112, C113, C114, C139	ECWFG2J225K	CONV
2	FCXCD4001070	C_1u_X7R_500V_2220	C115, C124		SMD
1	FCXCD4002200	C_2n2_X5R_25V_0805	C120		SMD
2	FCXCD4470000	C_470n_X7R_25V_0805	C122, C153		SMD
3	FCXC80022331	2n2	C123, C136, C171		SMD
1	FCXCN4100250	C_100n_X7R_250V_1206	C125		SMD
3	FCCE25010000	C_10u_AL_63V	C126, C156, C172		CONV
9	FCCE25220100	C_220u_AL_50V	C127, C141, C143, C149, C158, C164, C165, C166, C167		CONV
2	FCCCD1004500	C_100nF_MKP_450V	C128, C159		CONV
2	FCXCD1680000	C_68p_NP0_50V_0805	C131, C135		SMD
2	FCXCD4001000	C_1n_NP0_50V_0805	C132, C168		SMD
5	FCXCD4010000	C_10n_X7R_50V_0805	C133, C145, C155, C160, C175		SMD
2	FCXCD4220000	C_220n_X7R_25V_0805	C134, C169		SMD
1	FCXCD2470000	C_470p_NP0_50V_0805	C137		SMD
1	FCXCD2220000	C_220p_NP0_50V_0805	C138		SMD
2	FCXCD4001020	C_1u_X7R_50V_0805	C142, C180		SMD
3	FCCE25015000	C_10u_AL_450V	C144, C146, C147		CONV
2	FCXCD4100000	C_100n_X7R_50V_0805	C148, C174		SMD
1	FCCDN1100000	C_100n_MKP_250V	C150		CONV
2	FCCE55020000	C_220u_AL_450V	C151, C178		CONV
1	FCXCD1470000	C_47p_NP0_50V_0805	C152		SMD
1	FCCEX1502225	C_22u_TAN_25V	C154		SMD
1	FCXCN4100250	C_100n_250V_X7R	C157		SMD
1	FCXCD4004700	C_4n7_X7R_50V_0805	C161		SMD
1	FCCDK4002200	C_2n2_MKT_400V	C162		CONV
1	FCCCD2225000	C_2n2_500V_X1Y1	C163		CONV
1	FCXCD2330000	C_330p_NP0_50V_0805	C170		SMD
1	FCXCD2100000	C_100p_NP0_50V_0805	C176		SMD
1	FCXCD2150000	C_150p_NP0_50V_0805	C177		SMD
2	FCPERL255000	CB_18.439/245	CB101, CB102		MEC
1	FCCI01698000	Ct. Power Supply	CI101		CONV
7	FCXDD4007000	D_BYG10M-E3	D101, D111, D113, D116, D117, D120, D125		SMD
6	FCXDDBAS1600	D_BAS16	D102, D118, D124, D128, D129, D130		SMD
2	FCDDMSC01220	D_UJ3D1220KSD	D103, D110		CONV

1	FCREC1080040	PB4008	D104		CONV
2	FCREC1000600	TBS610	D105, D106		SMD
4	FCXDDES1J000	D_ES1J	D107, D112, D122, D123		SMD
2	FCXZ00012000	D_BZX84_Z12V	D108, D131		SMD
2	FCLEDSMD4020	D_LTST-C170KRKT	D109, D132		SMD
2	FCXDDTH42010	D_STTH4R02SY	D114, D115		SMD
2	FCXZ00003300	D_BZX84_Z3V3	D119, D126		SMD
1	FCXREC021000	D_BYG22D-E3	D127		SMD
2	FCFUS5016250	F_16A_250VAC	F101, F102		
3	FCFUS5015000	F_1A_250VAC	F103, F104, F105		
2	FCFER0050000	FBD_5A_47@100MHz	FB101, FB102		SMD
1	FCRAD8980000	Big Heatsink	HS101		CONV
2	FCRAD4030000	HS_M48079B011000G	HS102, HS103		CONV
3	FROPTSF06150	IC_SFH615	IC101, IC104, IC106		CONV
1	FCFONT012125	PS_LS15-13B12SS	IC102		CONV
2	FCIC32060000	IC_LNK3206D	IC103, IC112		SMD
4	FCIC43101000	IC_LM431ACM3X	IC105, IC108, IC110, IC115		SMD
1	FCIC01251000	IC_NCP12510BSN65T1G	IC107		SMD
1	FCIC28065000	IC_UCC28065DT	IC111		SMD
2	FCIC78500000	IC_NCP785AH150T1G	IC114, IC150		SMD
1	FCTIRKON0300	Insulating polymer 70x25mm	IN101		CONV
2	FCTERMF63000	K12-00A(H)	J101, J104		CONV
1	FCHEA1001000	J_SKT_HEADER_2x5	J102		CONV
1	FCCTAMP08000	8P MOLEX MALE SOCKET	J109		CONV
2	FCREL1007300	RZ031C4D012	K101, K102		CONV
2	FCCHK0500B12	L_5mH@100kHz	L101, L102		CONV
1	FCBB00033000	L_3.3uH_CHK_15A	L103	DTMSS-12.5/0.0033/15	CONV
2	FCCHKX247000	L_470u_430mA	L104, L108		SMD
1	FCCHKX102200	L_2u2_4A	L105		SMD
2	FCPORF317000	PORTAFUSE 5X20 10A (VDE)	PF101, PF102		CONV
3	FCPORF317000	PORTAFUSE 5X20 6,3A (VDE)	PF103, PF104, PF105		CONV
1	FCXTT0817000	Q_BC817-25	Q101		SMD
2	FCTR120R0450	Q_IMW120R045M1XKSA1	Q102, Q103		CONV
1	FCTR04N80C30	Q_SPA04N80C3	Q104		CONV
1	FCNTC0030000	THT_B57364S100M54	R101		CONV
2	FCXR51750000	R_75.0_0805_1%	R102, R105		SMD
1	FCXR53464000	R_4k64_0805_1%	R103		SMD
7	FCXR54100000	R_10k_0805_1%	R104, R109, R136, R137, R182, R226, R227		SMD
4	FCRP53150000	R_150_5%_2W_PR02	R106, R125, R140, R188		CONV
2	FCXR54750000	R_75k_0805_1%	R107, R111		SMD
6	FCRP56100000	100k	R108, R117, R118, R122, R203, R209		CONV
2	FCRP42100000	R_10_1W_PR01	R110, R173		CONV
5	FCXR53215000	R_2k15_0805_1%	R112, R115, R177, R214, R217		SMD
5	FCXR53100000	R_1k_0805_1%	R113, R157, R178, R190, R215		SMD

6	FCXR54383000	R_38k3_0805_1%	R114, R116, R126, R213, R216, R218		SMD
2	FCXR80001500	R_1.5_2512_1%	R121, R123	RMCF2512FT1R50	SMD
2	FCNTC0001500	NTC_15R	R124, R223		CONV
6	FCXR80000110	R_0.01_2512_1%	R127, R128, R129, R130, R132, R145		SMD
1	FCXR54348000	R_34k8_0805_1%	R131		SMD
1	FCXR53178000	R_1k78_0805_1%	R133		SMD
1	FCXR54147000	R_14k7_0805_1%	R135		SMD
4	FCXR53237000	R_2k37_0805_1%	R138, R139, R171, R175		SMD
4	FCXR56215000	R_2M15_0805_1%	R141, R142, R143, R165		SMD
3	FCXR53750000	R_7k5_0805_1%	R144, R158, R176		SMD
7	FCXR54215000	R_21k5_0805_1%	R147, R149, R169, R184, R202, R205, R220		SMD
3	FCXR51100000	R_10.0_0805_1%	R150, R168, R201		SMD
1	FCXR55121000	R_121k_0805_1%	R151		SMD
1	FCRP55560000	R_56k_2W_PR02	R153		CONV
2	FCXR53316000	R_3k16_0805_1%	R154, R172		SMD
1	FCXR53287000	R_2k87_0805_1%	R155		SMD
1	FCXR50215000	R_2.15_0805_1%	R156		SMD
1	FCXR54316000	R_31k6_0805_1%	R159		SMD
1	FCXR52215000	R_215.0_0805_1%	R160		SMD
1	FCXR63178000	1k78 0.5%	R162		SMD
1	FCXR55464000	R_464k_0805_1%	R163		SMD
4	FCXR55147000	R_147k_0805_1%	R164, R189, R191, R192		SMD
1	FCXR54562000	R_56k2_0805_1%	R166		SMD
2	FCXR51082000	R_8.2_0805_1%	R167, R174		SMD
1	FCXR54178000	R_17k8_0805_1%	R170		SMD
4	FCXR51162000	R_1.62_0805_1%	R179, R181, R185, R186		SMD
1	FCXR52261000	R_261.0_0805_1%	R180		SMD
3	FCXR54121000	R_12k1_0805_1%	R183, R207, R210		SMD
1	FCXR53196000	R_1k96_0805_1%	R187		SMD
3	FCXR54464000	R_46k4_0805_1%	R193, R204, R206		SMD
1	FCXR52100000	R_100.0_0805_1%	R195		SMD
4	FCXR55383000	R_383k_0805_1%	R197, R198, R199, R200		SMD
2	FCXR80150000	R_150_2512_1%	R211, R212		SMD
1	FCXR53619000	R_6k19_0805_1%	R219		SMD
1	FCXR53162000	R_1k62_0805_1%	R221		SMD
1	FCXR50000000	R_0_0805	R222		SMD
2	FCRP56100000	R_100k_5%_2W_PR02	R224, R225		CONV
2	FCT700301500	Screw M3x15 WHITE DIN798	SC101, SC102		CONV
2	FCT803005000	Screw M3x5 COMBI	SC103		CONV
1	FCT850300500	Screw M3x5 REDUCED HEAD	SC104		CONV
1	FCT400290900	Screw 2,9x9,5 DIN7981F BLACK	SC105		CONV
2	FCTFTEE42000	Trans EE42/21/20	T101, T102		CONV
1	FCTFTETD2900	Trans ETD29 13P EPCOS	T103		CONV
2	FCARM3500000	Metal Washer 3.5x9x1	WA101, WA102		CONV

2	FCARDE030000	External Toothed Washer M3	WA103, WA104		CONV
1	FCPINZAM2000	Transistor Clamp	CL101		CONV
1	FCREM10R0100	SNAP RIVET SR-3065B	RM101		CONV
1	FCSEPRPL0199	PLASTIC SPACER	SP101		CONV

PARTS LIST: Ct. Base Control 11.1748.01.00

Q	Code	Description	Reference	
4	FCXCD2100000	100p	C101, C102, C103, C104	SMD
14	FCCE25010000	10u/63	C105, C106, C107, C108, C109, C110, C111, C112, C121, C122, C123, C124, C359, C373	CONV
17	FCXCD1220100	22p 2%	C113, C114, C115, C116, C117, C118, C119, C120, C290, C291, C292, C293, C294, C295, C296, C297, C463	SMD
15	FCXCC1106000	10n NP0	C125, C126, C127, C128, C206, C287, C288, C289, C304, C343, C352, C426, C444, C455, C462	SMD
12	FCXCD2470000	470p	C129, C130, C131, C132, C133, C134, C135, C136, C234, C235, C238, C239	SMD
4	FCXCD4002250	2n2	C137, C138, C139, C140	SMD
110	FCXCC2100000	100n	C141, C142, C143, C144, C145, C146, C149, C150, C151, C154, C156, C158, C163, C165, C166, C169, C170, C171, C172, C173, C174, C204, C205, C244, C245, C250, C255, C264, C266, C268, C274, C278, C299, C301, C302, C303, C305, C306, C307, C308, C309, C310, C311, C312, C315, C316, C319, C320, C321, C322, C328, C330, C335, C337, C338, C339, C340, C342, C344, C347, C351, C355, C356, C361, C363, C367, C368, C369, C371, C378, C381, C384, C386, C387, C389, C398, C402, C412, C413, C414, C415, C416, C417, C418, C419, C437, C438, C456, C465, C466, C468, C469, C470, C475, C477, C478, C480, C483, C484, C485, C487, C488, C489, C490, C491, C492, C493, C503, C616, C617	SMD
1	FCCE05000000	220u/10	C147	CONV
22	FCXCD4001020	1u	C148, C153, C157, C267, C279, C280, C281, C282, C283, C284, C285, C286, C298, C329, C345, C346, C348, C350, C377, C385, C390, C400	SMD
11	FCCEZ1510010	CG 100u/10	C152, C155, C199, C202, C203, C237, C265, C360, C453, C476, C506	SMD
28	FCCE10000000	47u/35	C159, C160, C161, C162, C175, C176, C177, C178, C179, C180, C181, C182, C223, C224, C225, C226, C227, C228, C229, C230, C256, C257, C258, C259, C269, C277, C341, C372	CONV
16	FCXCD4004710	4n7	C164, C167, C183, C184, C185, C186, C187, C188, C189, C190, C231, C232, C260, C261, C262, C263	SMD
10	FCXCC1105001	1n	C168, C236, C495, C496, C497, C498, C499, C500, C501, C502	SMD
8	FCXCD2330000	330p	C191, C192, C193, C194, C195, C196, C197, C198	SMD
5	FCCEZ1502235	CG 22u/35	C200, C201, C578, C588, C589	SMD
8	FCXCD2150000	150p	C207, C208, C209, C210, C211, C212, C213, C214	SMD
17	FCXCD1220000	22p	C215, C216, C217, C218, C219, C220, C221, C222, C240, C241, C242, C243, C251, C252, C253, C254, C471	SMD
1	FCXCD1330000	33p	C233	SMD
6	FCXCD2220000	220p	C246, C247, C248, C249, C358, C482	SMD

12	FCXCD4470000	470n	C270, C271, C272, C273, C275, C324, C325, C326, C327, C364, C374, C472	SMD
5	FCCE20004700	4.7u/35	C276, C331, C332, C333, C334	CONV
10	FCXC50100601	10u 25V	C300, C313, C314, C317, C318, C323, C336, C388, C432, C443	SMD
15	FCXCD4004720	4u7/25V	C349, C357, C376, C399, C401, C405, C410, C420, C425, C431, C457, C458, C459, C460, C461	SMD
4	FCXCD4022000	22n	C353, C380, C474, C505	SMD
3	FCXCD5220160	22uF	C354, C464, C479	SMD
6	FCXCD4100000	100n	C362, C379, C454, C494, C504, C507	SMD
2	FCCE25047000	47u/63	C365, C366	CONV
2	FCXCC1100000	10p NP0	C370, C375	SMD
14	FCXCD4220000	220n	C382, C383, C391, C392, C394, C395, C396, C397, C403, C406, C407, C408, C409, C467	SMD
3	FCCEZ1502225	CG 22u/25	C393, C404, C411	SMD
16	FCXCD4022100	22u/10V	C421, C422, C423, C424, C427, C428, C429, C430, C433, C434, C435, C436, C439, C440, C441, C442	SMD
1	FCXCD4010000	10n	C473	SMD
23	FCXC21000301	100n	C481, C566, C567, C568, C569, C576, C577, C579, C580, C581, C582, C583, C584, C585, C586, C587, C594, C595, C596, C597, C598, C599, C610	SMD
1	FCXCD1100000	10p	C486	SMD
2	FCXC20010601	1u 25V	C565, C593	SMD
2	FCXCD1150000	15p	C590, C592	SMD
1	FCXCD4047000	47n	C591	SMD
1	FCCI01748000	Ct. Base+Perif	CI	CONV
24	FCXDDBAV9900	BAV99	D101, D102, D103, D104, D105, D106, D107, D108, D134, D135, D136, D137, D138, D139, D140, D141, D142, D143, D144, D145, D146, D147, D148, D149	SMD
1	FCXDDBAT5400	BAT54	D109	SMD
11	FCLEDSMD4080	LTW-170TK	D111, D117, D118, D119, D122, D130, D151, D153, D163, D166, D168	SMD
4	FCXDDBAS1600	BAS16	D112, D113, D114, D124	SMD
11	FCLEDSMD4020	LTST-C170KRKT	D115, D116, D120, D123, D150, D152, D154, D155, D162, D165, D167	SMD
3	FCLEDSMD4030	LTST-C170KGKT	D121, D160, D161	SMD
14	FCXDDBAS2800	BAS28	D125, D126, D127, D128, D129, D164, D171, D172, D173, D174, D175, D176, D177, D178	SMD
1	FCXDD4007000	1N4007	D132	SMD
1	FCDDKE120000	SMAJ12A	D133	SMD
2	FCXZ00005600	Z5.6V	D156, D157	SMD
6	FCXZ00004700	Z4.7V	D158, D159, D169, D170, D180, D181	SMD
1	FCXZ00003300	Z3.3V	D179	SMD
7	FCXFER010000	31 600mA	FB101, FB107, FB108, FB109, FB110, FB111, FB112	SMD
2	FCXFER010000	Ferrite 31ohm 600mA	FB102, FB103	SMD
2	FCFER0050000	Ferrite BDS	FB104, FB105	SMD
1	FCRAD8990000	RASPBERRY PI ALU HEATSINK + SCREW + THPAD	HS101	CONV

10	FCIC55322000	NE5532A	IC101, IC102, IC103, IC104, IC108, IC109, IC110, IC111, IC112, IC113	SMD
2	FCIC07201000	TL072	IC105, IC142	SMD
1	FCIC53640000	CS5364-DQZ	IC106	SMD
1	FCREG2986000	LP2986AIM-3.3	IC107	SMD
1	FCIC43850000	CS4385A-DQZ	IC114	SMD
4	FCIC74HC5950	74HC595	IC115, IC118, IC120, IC144	SMD
4	FCIC34200000	LMV342	IC116, IC125, IC140, IC143	SMD
2	FCIC18400000	PCM1840IRTWT	IC117, IC119	SMD
2	FCIC10150000	ADS1015IDGSR	IC121, IC124	SMD
2	FCIC74165010	74HC165	IC122, IC123	SMD
1	FCIC10210000	MIMXRT1021DAF5A	IC126	SMD
1	FRMODUCM4001	RASPBERRY CM4	IC127	CONV
1	FCIC01117L00	TLV1117LV33DCY	IC128	SMD
1	FCREG75L1010	TL750L10CLP	IC129	CONV
2	FCTRHN1C0300	HN1C03FU	IC130, IC131	SMD
2	FCIC74LVC1G7	SN74LVC1G07DBVR	IC132, IC145	SMD
1	FCIC47CVB020	MCP47CVB02-E/UN	IC133	SMD
1	FCIC5351B020	SI5351B-B02073-GM	IC134	SMD
8	FCICLVC1G126	74LVC1G126GV	IC135, IC146, IC147, IC149, IC153, IC155, IC156, IC157	SMD
1	FCIC21210000	EMI2121MTTAG	IC136	SMD
1	FCIC08563000	PCF8563T	IC137	SMD
2	FCIC0552308A	LSP5523-R8A	IC138, IC154	SMD
2	FCXDDSUP0700	PRTR5V0U4D	IC139, IC141	SMD
1	FCICI2110000	WGI210AT S LJXR	IC148	SMD
1	FCIC74HC2440	SN74HC244PWR	IC150	SMD
1	FCIC74LVC1G8	SN74LVC1G08DBVR	IC151	SMD
1	FCIC74LVC1G1	SN74LVC1G132DBV	IC152	SMD
10	FCREG3007000	Board Connector Male 3p	J101, J102, J103, J104, J105, J106, J107, J108, J109, J119	CONV
1	FCCONTPOS050	Dubox 40pins	J110	CONV
1	FCCONTPOS040	Dubox 34pins	J111	CONV
3	FCCONSMDH020	Rotary Lock 20p	J112, J113, J124	SMD
2	FCHEA1002601	Head 26p	J114, J117	CONV
1	FCREG3007600	Board Connector Male 6p	J115	CONV
3	FCTERMF63000	Faston 6.3mm	J116, J118, J120	CONV
1	FCREG3008000	Board Connector Male 2p	J121	CONV
1	FCHEA1001000	Head 10p	J122	CONV
2	FCBASETH0100	0826-1X1T-43-F	J123, J136	CONV
4	FCTERM010000	Jumper Pin 6mm	J126, J127, J128, J129	CONV
1	FCBASUSB001C	204711-0001	J130	SMD
1	FCPORTCR2032	Batt. Holder CR2032	J131	SMD
2	FCCONSMD0400	DF40HC(3.0)-100DS-0.4V	J132, J133	SMD
1	FCCONTARSD02	ATOM-A01450	J134	SMD
1	FCCTM0004000	B4B-EH-A	J135	CONV
4	FCREL0045000	TQ2-5V	K101, K102, K103, K104	CONV
6	FCCHKX480000	ACM2520-3P	L101, L102, L103, L104, L115, L116	SMD
9	FCCHKX068000	68uH 0.22A	L105, L106, L107, L108, L109, L110, L112, L113, L114	SMD
1	FCCHKX447001	4.7uH 1.18A	L111	SMD
2	FCCHKX310000	10uH 2A	L117, L118	SMD
2	FCSUJ3010000	Angled terminal	MP101, MP102	CONV
1	FCTR123BS100	BSS123	Q101	SMD
5	FCXTT0847000	BC847B	Q102, Q106, Q107, Q108, Q109	SMD

1	FCXTT0857000	BC857B	Q103	SMD
20	FCXR52100000	100.0	R101, R102, R103, R104, R105, R106, R107, R108, R141, R142, R143, R144, R145, R146, R147, R148, R149, R150, R151, R152	SMD
23	FCXR55100000	100k	R109, R110, R111, R112, R113, R114, R115, R116, R201, R202, R203, R204, R205, R206, R207, R208, R237, R238, R239, R240, R317, R399, R441	SMD
18	FCXR54243001	24k3 0.1%	R117, R118, R119, R120, R121, R122, R123, R124, R286, R287, R289, R291, R292, R293, R294, R296, R434, R443	SMD
8	FCXR63825000	8k25 0.5%	R125, R126, R127, R128, R129, R130, R131, R132	SMD
8	FCXR52619000	619	R133, R134, R135, R136, R137, R138, R139, R140	SMD
14	FCXR52562000	562	R153, R246, R247, R248, R262, R263, R265, R267, R269, R272, R274, R279, R330, R365	SMD
11	FCXR53121000	1k21	R154, R245, R249, R264, R266, R268, R270, R271, R273, R277, R404	SMD
2	FCXR30562000	56.2	R155, R225	SMD
11	FCXR30100000	10.0	R156, R275, R276, R288, R374, R375, R376, R393, R406, R435, R499	SMD
20	FCXR54100000	10k0	R157, R158, R159, R160, R161, R162, R163, R164, R210, R211, R212, R213, R251, R252, R253, R254, R307, R308, R387, R438	SMD
12	FCXR53147000	1k47	R165, R166, R167, R168, R169, R170, R171, R172, R214, R215, R216, R217	SMD
17	FCXR54316000	31k6	R173, R174, R175, R176, R177, R178, R179, R180, R181, R182, R183, R184, R185, R186, R187, R188, R312	SMD
6	FCXR53316000	3k16	R189, R190, R191, R192, R230, R231	SMD
11	FCXR53464000	4k64	R193, R194, R195, R196, R197, R198, R199, R200, R316, R398, R401	SMD
21	FCXR31000200	10k0	R209, R260, R302, R310, R314, R315, R324, R331, R332, R336, R337, R338, R339, R358, R359, R362, R367, R378, R381, R388, R397	SMD
5	FCXR54511000	51k1	R218, R219, R431, R432, R442	SMD
1	FCXR53162000	1k62	R220	SMD
8	FCXR54196000	19k6	R221, R222, R223, R224, R226, R227, R228, R229	SMD
1	FCXR54464000	46k4	R232	SMD
4	FCXR53383000	3k83	R233, R234, R235, R236	SMD
12	FCXR52316000	316	R241, R242, R243, R244, R408, R410, R412, R414, R416, R418, R420, R422	SMD
9	FCXR31000001	100	R250, R448, R449, R451, R452, R453, R455, R456, R457	SMD
7	FCXR53100000	1k0	R255, R256, R257, R258, R259, R379, R440	SMD
1	FCXR53511000	5k11	R261	SMD
6	FCXR52464000	464	R278, R280, R281, R282, R283, R284	SMD
2	FCXR20051301	5k1	R285, R377	SMD
17	FCXR63100010	1k0	R290, R295, R318, R334, R344, R354, R355, R356, R363, R366, R380, R385, R390, R391, R392, R394, R395	SMD
12	FCXR53619000	6k19	R297, R299, R300, R301, R304, R305, R319, R320, R427, R428, R429, R430	SMD
4	FCRX62100020	4x10k	R298, R303, R306, R450	SMD
1	FCXR56215000	2M15	R309	SMD

1	FCXR56100000	1M	R311	SMD
1	FCXR35000001	500	R321	SMD
1	FCXR53261000	2k61	R322	SMD
8	FCXR53464010	4k64	R323, R360, R361, R370, R371, R372, R373, R396	SMD
2	FCXR54121000	12k1	R325, R402	SMD
4	FCXR53237000	2k37	R326, R327, R328, R329	SMD
1	FCXR30280301	28k	R333	SMD
1	FCXR31000300	100k	R335	SMD
4	FCXR53562000	5k62	R340, R341, R342, R343	SMD
1	FCXR52681000	681	R345	SMD
4	FCPR21703110	50kBx2	R346, R347, R348, R349	CONV
4	FCXR55681000	681k	R350, R351, R352, R353	SMD
1	FCXR55562000	562k	R357	SMD
4	FCXR52261000	261	R364, R369, R522, R523	SMD
23	FCXR20100301	10k	R368, R400, R405, R426, R496, R497, R498, R500, R501, R505, R506, R507, R508, R509, R510, R511, R512, R513, R515, R516, R517, R518, R519	SMD
2	FCRF22100000	NF10/ 1/2	R382, R383	CONV
1	FCXR51332000	33.2	R386	SMD
1	FCRX62100000	4x10	R389	SMD
8	FCXR30332000	33.2	R407, R409, R411, R413, R415, R417, R419, R421	SMD
1	FCXR35000001	500R	R423	SMD
2	FCXR63000010	0	R424, R524	SMD
1	FCXR55348000	348k	R439	SMD
1	FCXR53499000	4K99 1%	R504	SMD
1	FCINTAP01800	PS-2213ANL	S101	CONV
3	FCINTMIC7000	Micro switch 4ct	S108, S109, S110	CONV
4	FCSEPCI03000	Spacer Sold. M2.5x3	SP102, SP103, SP104, SP105	CONV
1	FCCRISX24000	24MHz	X101	SMD
1	FCCRISX25000	25MHz	X102	SMD
1	FCCRISX27000	27MHz	X104	SMD
1	FCCRISX00327	32.768kHz	X105	SMD
4	FCT750250300	DIN7985 M2.5x3	HS101	CONV
4	FCT750252000	DIN7985 M2.5x20	HS101	CONV
4	FCMUELLE3000	Spring 3.76x6.35 for M2.5 screw	HS101	CONV

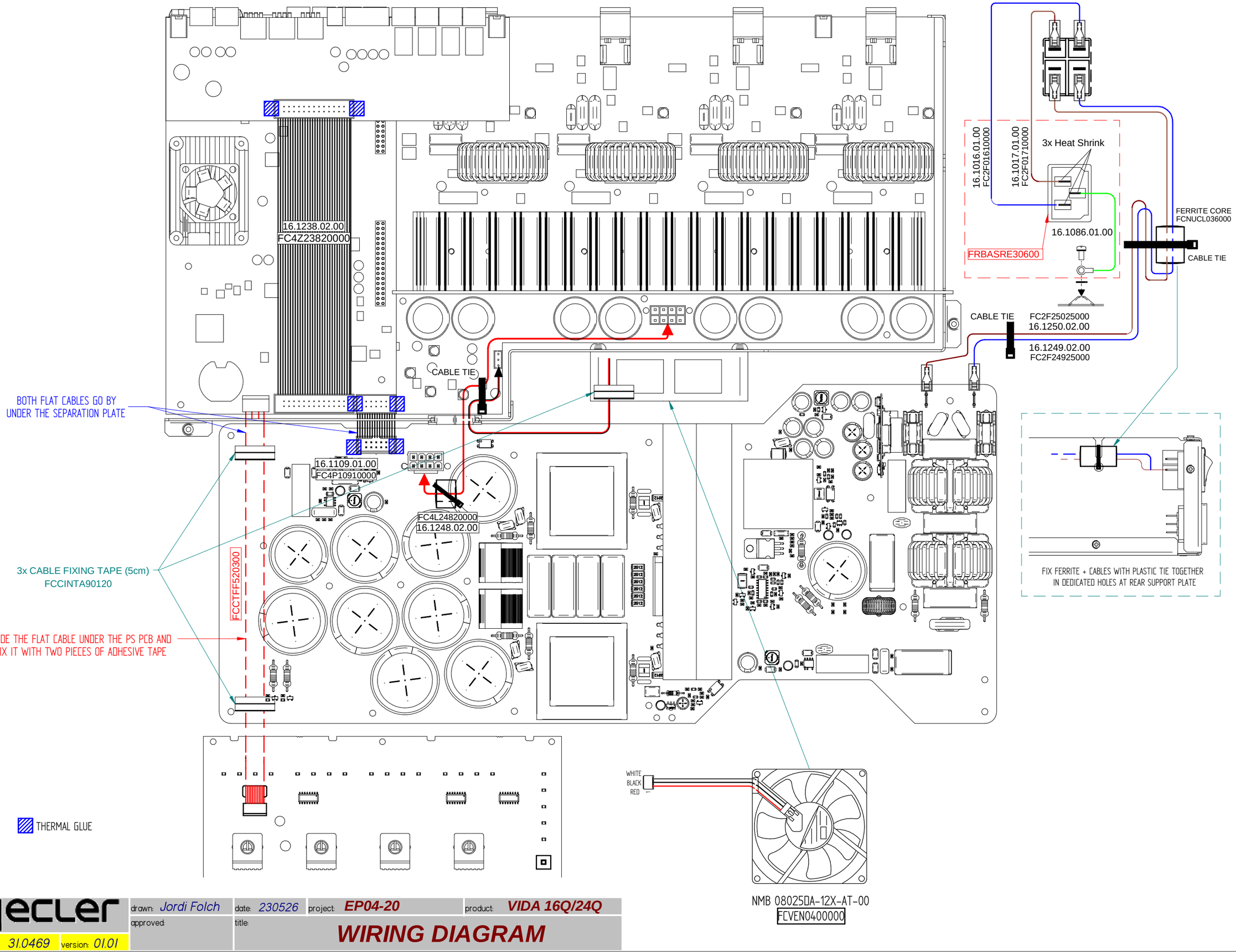

ecler	drawn: Jordi Folch	date: 230526	project: EP04-20	product: VIDA 16Q/24Q
number: 31.0469 version: 01.01	approved:	title: WIRING DIAGRAM		

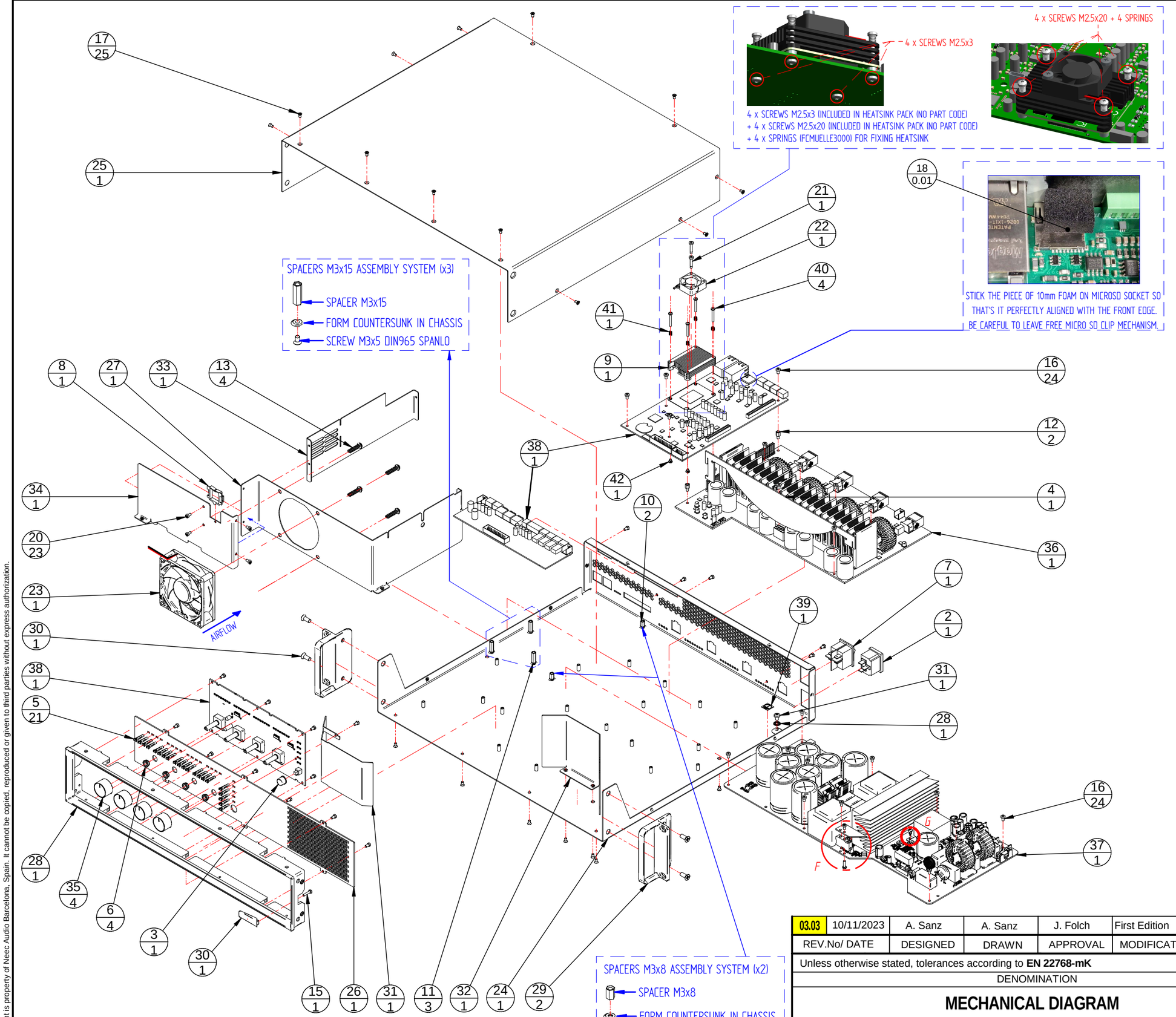

Nº	Qty.	Code	Description
1	1	FCARDE040000	TOOTHED WASHER M4
2	1	FRBASRE30600	MAINS SOCKET VIDA SERIES
3	1	FCBOTC231500	PUSH BUTTON D10
4	1	FCCI01744000	AIRGUIDE PCB FOR PA HEATSINK
5	21	FCGUIAL25000	RECTANGULAR LIGHT PIPE GUIDE VERTICAL
6	4	FCINSPLA2000	ROTARY POT. PLASTIC GUIDE
7	1	FCINTRED3500	MAINS SWITCH W/LIGHT
8	1	FCPASC060000	WIRE SADDLE LEWSE-21-01
9	1	FCRAD8990000	RASPBERRY PI ALU HEATSINK + SCREWS + TH PAD
10	2	FCSEP3080000	HEXAGONAL SPACER M3x8
11	3	FCSEP3160000	HEXAGONAL SPACER M3x16
12	2	FCSEPMF03060	SPACER M3x6 MALE-FEMALE
13	4	FCT060512000	SCREW 5,1x20
14	4	FCT200501200	SCREW DIN965 M5x12
15	1	FCT500251200	SCREW DIN7985 M2.5x12
16	24	FCT803005000	SCREW DIN 7985 M3x5 COMBI
17	25	FCT803005500	SCREW DIN965 M3x5 BLACK
18	0.01	FCTIRACAU000	ADHESIVE FOAM TAPE 10mmx8mm (refer.= 1 meter)
19	1	FCT804006000	SCREW M4x6 SPANLO BLACK
20	23	FCT850300500	SCREW M3x5 REDUCED HEAD
21	2	FCT850301600	SCREW M3x16 TRILOBULAR WHITE
22	1	FCVEN0300000	FAN 30x30 12VDC
23	1	FCVEN0400000	FAN 80x80 NMB 12VDC CABLE=200
24	1	FP0372400000	BASE CHASSIS
25	1	FP0372500000	TOP COVER
26	1	FP0372600000	FRONTPANEL VIDA24Q
26	1	FP0372600010	FRONTPANEL VIDA16Q
27	1	FP0372700000	CENTRAL MECHANICAL SUPORT
28	1	FP0376000000	FRONTAL FRAME
29	2	FP0376100000	RIGHT-LEFT SIDE HANDLE
30	1	FP0376200000	ECLER LOGO VIDA SERIES
31	1	FP0376400000	AIRGUIDE PLATE 1 VIDA24Q
32	1	FP0376500000	AIRGUIDE PLATE 2 VIDA24Q
33	1	FP0376600000	REAR AIRGUIDE VIDA24Q
34	1	FP0377000000	CENTRAL MECHANICAL SUPORT
35	4	FRBOTRD25000	ROTARY KNOB D22
36	1	FINS01116970	POWER AMP CIRCUIT VIDA24Q
37	1	FINS01116980	POWER SUPPLY CIRCUIT VIDA24Q
38	1	FINS01117480	CONTROL + PERIPHERAL CIRCUITS VIDA24Q
39	1	FCETIZTT0000	EARTH TAG
40	4	FCT750252000	SCREW DIN7985 M2.5x20
41	4	FCMUELLE3000	SPRING 3.76x6.35
42	4	FCT750250300	SCREW DIN7985 M2.5x3

03.03	10/11/2023	A. Sanz	A. Sanz	J. Folch	First Edition
REV.No/ DATE		DESIGNED	DRAWN	APPROVAL	MODIFICATION

Unless otherwise stated, tolerances according to **EN 22768-mK**

DENOMINATION			SCALE
MECHANICAL DIAGRAM			1:2
PROJECT	PRODUCT	DRAWING No	SHEET
EP04-20	VIDA16Q/24Q	30.0532	1/2

ecler
C/ MOTORS 166-168, BARCELONA
CODE
-

C:\Users\a.sanz\Neec Audio Barcelona SL\Apar - General\30 Diagrames de muntatge mecànic\30-0532-0303 Mechanical diagram EP04-20 VIDA 16Q_24Q.dft

This document is property of Neec Audio Barcelona, Spain. It cannot be copied, reproduced or given to third parties without express authorization.

FIT ECLER LOGO IN FRONTAL FRAME
AND FIX IT WITH 1 x SCREW M2.5x12

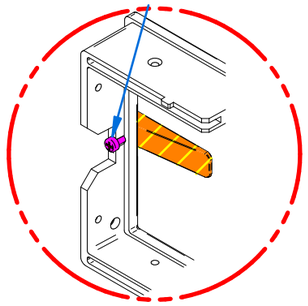

DETAIL C

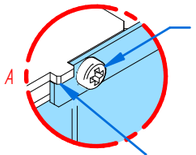

DETAIL A

SCREW M3x5 REDUCED HEAD

FIT FRONTAL AIRGUIDE BY REAR IN
FRONTAL FRAME AND FIX WITH 2 x SCREWS

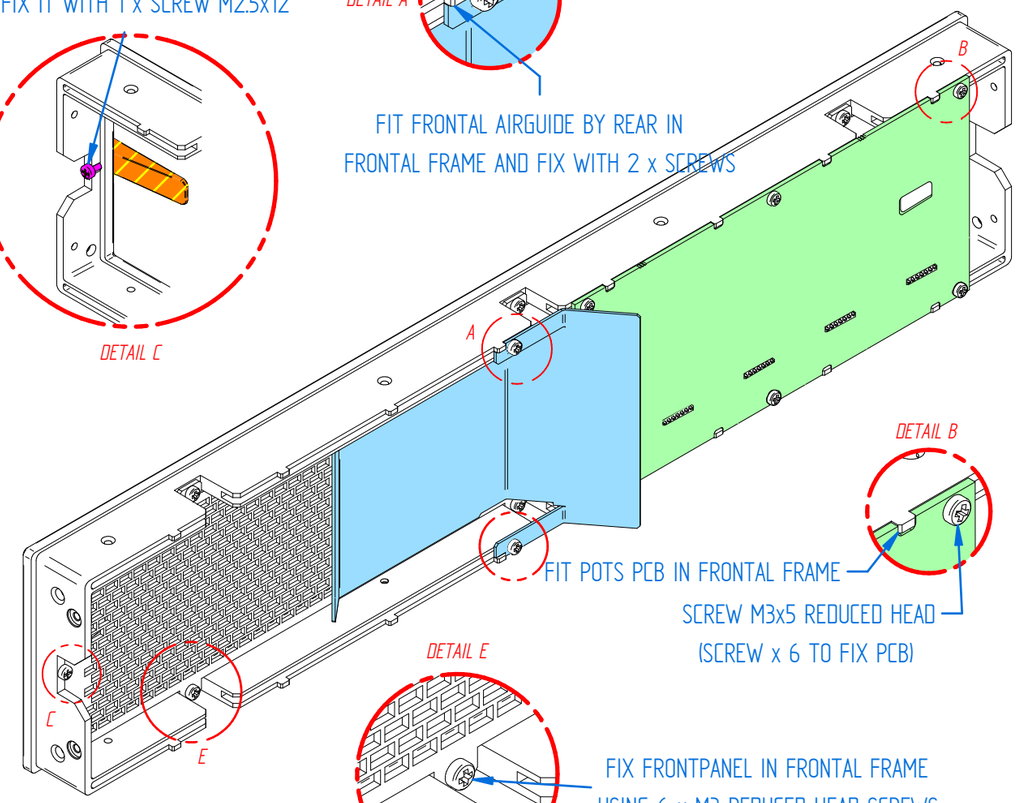

DETAIL B

FIT POTS PCB IN FRONTAL FRAME

SCREW M3x5 REDUCED HEAD
(SCREW x 6 TO FIX PCB)

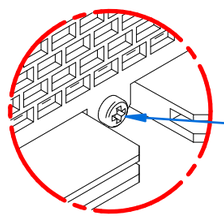

DETAIL E

FIX FRONTPANEL IN FRONTAL FRAME
USING 6 x M3 REDUCED HEAD SCREWS

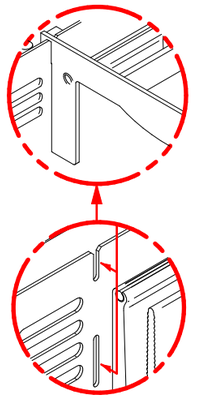

DETAIL C

Slightly tilt the piece to fit the left side and,
once inserted, finish with the right side

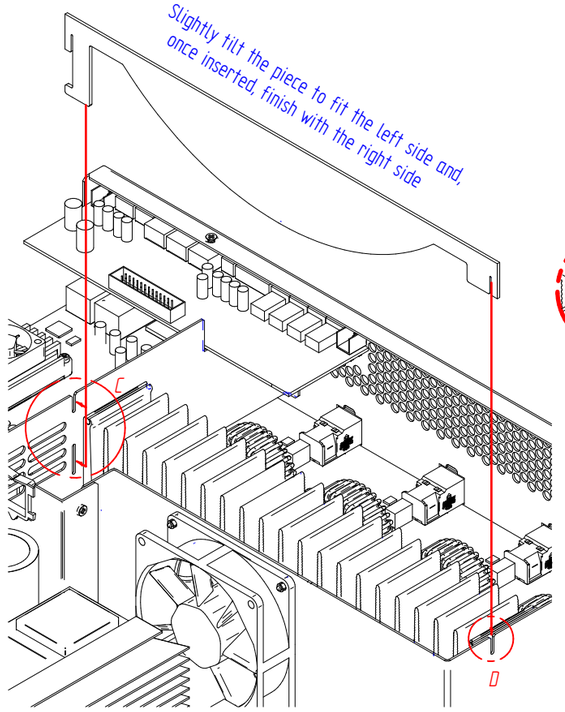

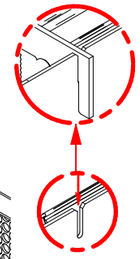

DETAIL D

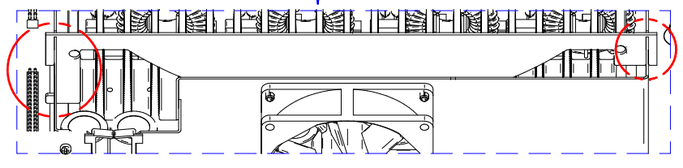

MAKE SURE THE LOGO IS PERFECTLY
ALIGNED WITH THE FRONT FRAME
BOTH HORIZONTALLY AND VERTICALLY

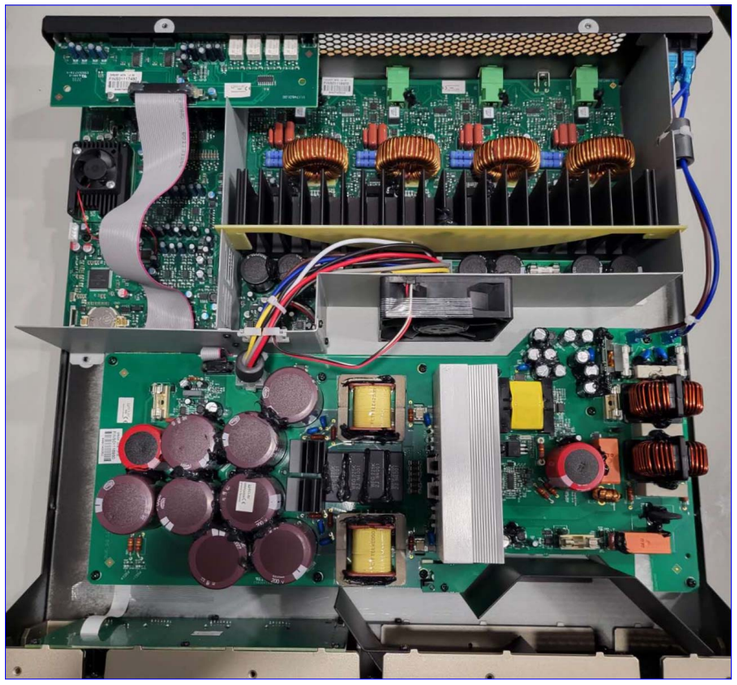

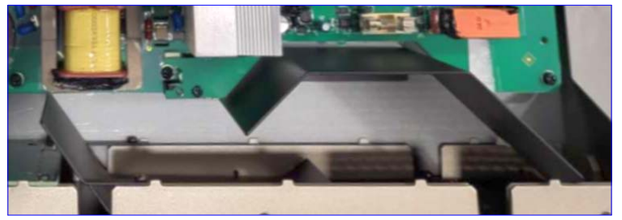

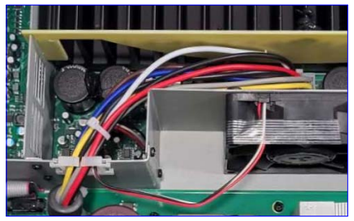

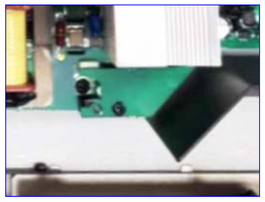

REV.No/ DATE	DESIGNED	DRAWN	APPROVAL	MODIFICATION
03.02 10/11/2023	A. Sanz	A. Sanz	J. Folch	First Edition

Unless otherwise stated, tolerances according to **EN 22768-mK**

DENOMINATION	SCALE
MECHANICAL DIAGRAM	1:1

ecler
C/ MOTORS 166-168, BARCELONA

CODE

PROJECT	PRODUCT	DRAWING No	SHEET	CODE
EP04-20	VIDA16Q/24Q	30.0532	2/2	-

C:\Users\a.sanz\Neec Audio Barcelona SL\Apar - General\30 Diagrames de muntatge mecànic\30-0532-0303 Mechanical diagram EP04-20 VIDA 16Q_24Q.dft

This document is property of Neec Audio Barcelona, Spain. It cannot be copied, reproduced or given to third parties without express authorization.

N°	Qty.	Code	Description
1	4	FCARANY06000	WASHER M6 NYLON BLACK 12x6,4x1,5
2	1	FCBOLS060000	STANDARD BAG RECICLED 75x65
3	1	FCBOLS070000	KRAFT PAPER BAG 120x170
4	1	FCCAJVIDA010	CARDBOARD PACKING BOX VIDA SERIES
5	2	FCCAJVIDA020	INTERNAL PACKING REINFORCEMENT VIDA SERIES
6	1	FCCAJVIDA030	ACCESSORIES BOX FOR PACKING VIDA SERIES
7	1	FCCAJVIDA030	ACCESSORIES BOX FOR PACKING VIDA SERIES
8	1	FCCONX017500	EU AC VOLTAGE CORD 3x1 1MT
9	1	FCCONX056050	MULTIPLUG AC VOLTAGE CORD
10	1	FCETI0951140	PRODUCT LABEL PACK (ONE FOR EACH UNIT)
11	2	FCETIMAC0100	UNIT MAC ADDRESS LABEL
12	1	FCMANGEN0000	GENERIC USER MANUAL
13	4	FCPIE1125500	RUBBER FOOT
14	1	FCREG2006000	CONNECTING TERMINAL STRIPS 2C
15	10	FCREG2007000	CONNECTING TERMINAL STRIPS 3C
16	1	FCREG2007300	CONNECTING TERMINAL STRIPS 6C
17	4	FCREG2009000	CONNECTING TERMINAL STRIPS 2C 7,62
18	1	FCTARJG00000	WARRANTY CARD
19	1	GENERIC	PLUG 2 FOR MULTIPLUG AC CORD (FCCONX056050)
20	1	GENERIC	PLUG 3 FOR MULTIPLUG AC CORD (FCCONX056050)
21	1	GENERIC	PLUG 1 FOR MULTIPLUG CORD (FCCONX056050)

Note: Remove all plastic bags from AC cords & AC plugs.

The only bag that should be included is the one that protects the device.

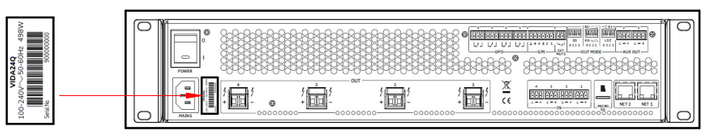

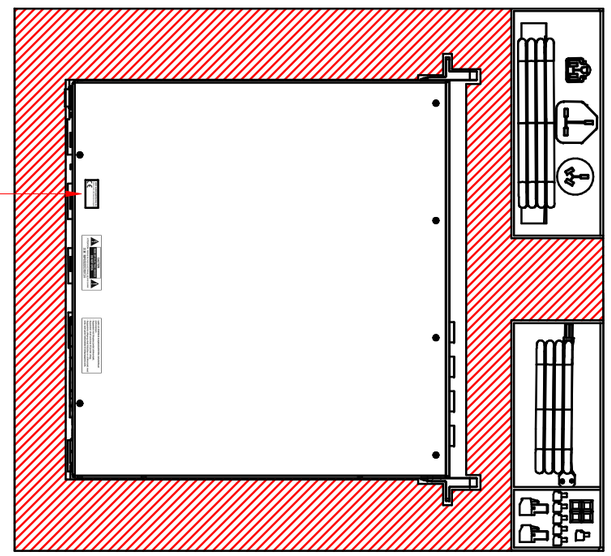

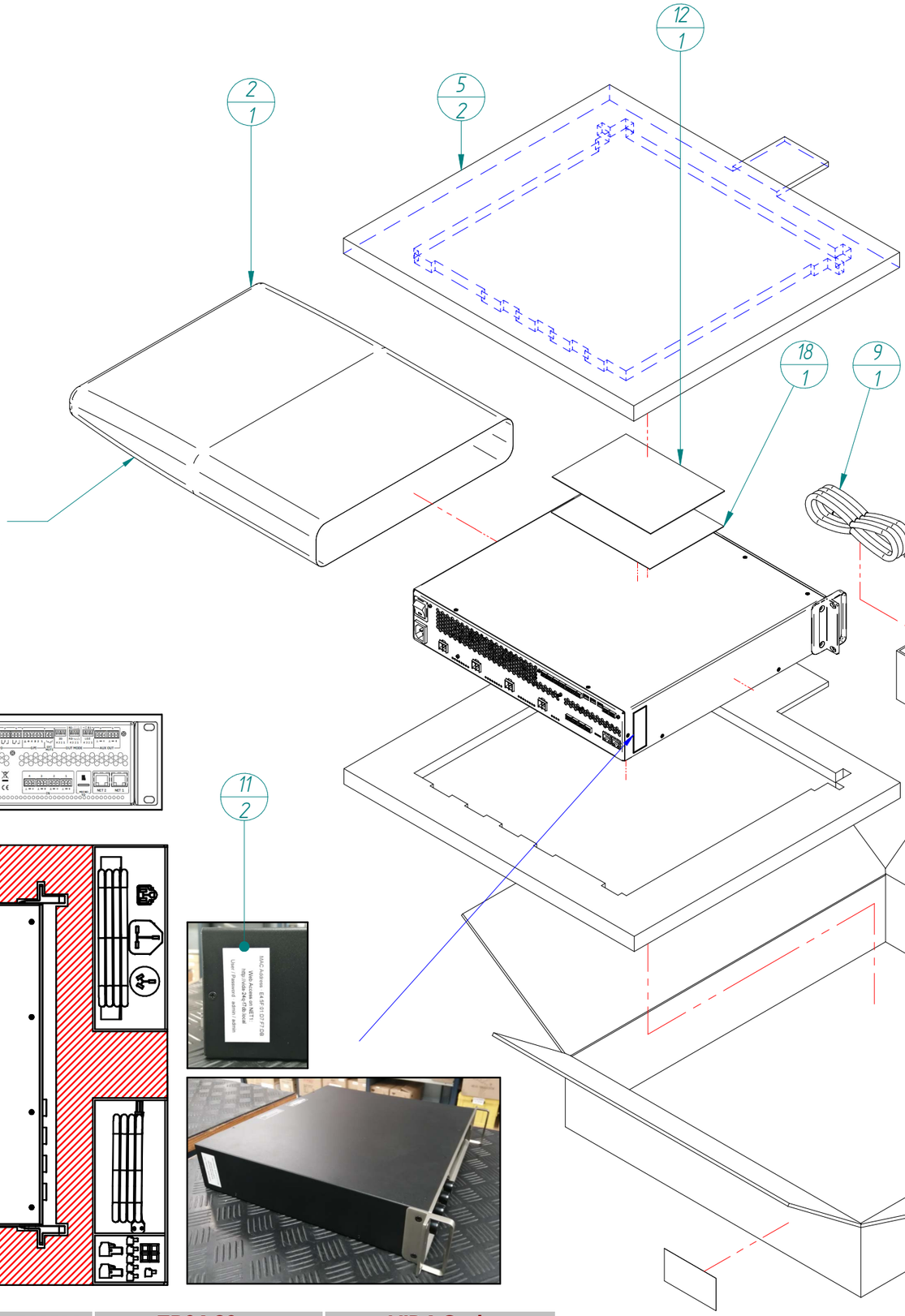

ecler	drawn: Jordi Folch	date: 230526	project: EP04-20	product: VIDA Series
number: 32.0500 version: 02.00	approved:	title: PACKING DIAGRAM		

All product characteristics are subject to variation due to production tolerances. **NEEC AUDIO BARCELONA S.L.** reserves the right to make changes or improvements in the design or manufacturing that may affect these product specifications.

For technical queries contact your supplier, distributor or complete the contact form on our website, in Support / Technical requests.

Motors, 166-168 -08038 Barcelona - Spain-(+34) 932238403 | information@ecler.com | www.ecler.com