PRODUCT DATASHEET · CYGNUS NETWORK VIDEO RECORDERS

0070-10403

Cygnus-BX-16CH-AI · 16-Channel PoE 4K Network Video Recorder

Plug in, power up, record

A 1U 16-channel NVR with sixteen PoE ports, two disk bays, 4K HDMI output and AI search.

NDAA COMPLIANT | 16 × POE | ONVIF



16 CH	16 × PoE	160 Mbps	4K	2 × 12 TB	5 YR
IP CAMERAS	802.3AF/AT	BANDWIDTH	HDMI OUTPUT	SATA HDD	WARRANTY

Product overview

The **Ernitec Cygnus-BX-16CH-AI** is a network video recorder for up to sixteen IP cameras. Sixteen built-in PoE ports (802.3af/at, 128 W in total) power and connect the cameras with a single cable each, and 160 Mbps incoming and outgoing bandwidth handles cameras up to 12 MP.

Face comparison, human and vehicle attribute search and perimeter protection with target filtering run on the NVR itself, and live view goes out on HDMI up to 4K and VGA, mirrored or as two independent screens. Two SATA bays take disks of up to 12 TB each, with disk group support.

Key features

- **16 IP channels** up to 160 Mbps in and out
- **Plug & play PoE** 16 ports, 802.3af/at, max. 128 W
- **Decoding** up to 1 ch 12 MP or 16 ch D1
- **Dual display** HDMI up to 4K plus VGA, main/aux
- **Storage** 2 SATA bays, up to 12 TB each, ANR
- **Built-in PSU** 100–240 VAC, 372 × 311.2 × 46.4 mm

Analytics & integration

- **Face comparison** and image-based search
- **Attribute search** human and vehicle
- **Perimeter** up to 4 ch intrusion with target filter
- **VCA linkage** alarms from camera analytics
- **Remote access** P2P, app push, up to 8 users
- **Cyber security** signed firmware, TLS, 802.1X

Typical applications

Shops and retail chains · Offices and schools · Warehouses and logistics · Hotels and restaurants · Car parks and petrol stations.

Recorder specification

Video & audio	
IP camera input	16 channels
HDMI output	3840 × 2160, 1920 × 1080, 1280 × 1024, 1024 × 768
VGA output	1920 × 1080, 1280 × 1024, 1024 × 768
Different source output	Supported (HDMI and VGA)
Multi-screen display	Mirrored: 1/4/8/9/16 Auxiliary screen mode: main 1/4/8, auxiliary 1/4/8
Decoding capacity	1 ch 12 MP, 4 ch 4 MP, 8 ch 1080P, 16 ch D1 With local intelligence enabled: 1 ch 12 MP, 4 ch 1080P, 8 ch D1, 16 ch D1

Recording	
Video compression	H.265, H.264
Recording resolution	12 MP, 8 MP, 6 MP, 5 MP, 4 MP, 3 MP, 1080P, 720P, D1 etc.
Recording mode	Manual, schedule (regular, continuous), event
Dual stream	Supported
Audio compression	G.711A, G.711U, PCM

Playback & backup	
Synchronous playback	16/9/4/1
Search mode	Time/date, alarm, picture grid, event
Playback control	Play, pause, FF/REW, slow, digital zoom
Backup mode	USB device, network

Storage	
HDD	2 × SATA interfaces
Capacity	Up to 12 TB per disk
Disk group	Supported
ANR	Supported

Intelligent analytics	
By NVR	Face comparison and image-based search; human and vehicle attribute search; up to 4 ch intrusion detection with human/vehicle target filtering
By camera	Intrusion, smart motion, single and double line crossing, object left, object removed, bad signal, loitering, multi-loitering, abnormal speed, wrong way, illegal parking, people counting, fence, enter and leave area, smoking detection, smoke and flame detection, fire spot detection etc.
Trigger actions	Buzzer, push message to app, full screen, email, FTP, PTZ, speaker, alarm out, camera alarm out, event recording
Smart search	Supported

Event	
General event	Motion detection, video loss, alarm in, abnormal alarm, alarm out
Abnormal alarm	Disk alarm, IP address conflict, network disconnect
Event actions	Buzzer, push message to app, full screen, email, FTP, PTZ, alarm output, recording

Network	
Bandwidth	Incoming 160 Mbps / outgoing 160 Mbps (112 Mbps each with AI enabled)
Protocols	HTTP, HTTPS, TCP/IP, IPv4, IPv6, UPnP, UDP, RTSP, SMTP, NTP, DNS, DHCP, FTP, P2P, IP address filtering, DDNS, IEEE 802.1X, SNMP, 3G/4G, PPPoE
Remote users	Up to 8 users
P2P	P2P, Web NAT
Interoperability	ONVIF, SDK, CGI
Security	IP address filtering, user access log, IEEE 802.1X, TLS, signed firmware

Interfaces & general

Interface	
Network interface	1 × RJ-45, 10/100/1000 Mbps self-adaptive Ethernet
PoE interface	16 ports, 10/100 Mbps, IEEE 802.3af/at, max. 128 W
Video output	1 × HDMI, 1 × VGA
Audio	1 × input, 1 × output
Alarm	8 × input, 2 × output
USB	Front: 2 × USB 2.0; rear: 1 × USB 2.0
Reset button	On-board reset button

General	
Power supply	100 to 240 VAC
Operating temperature	−10 °C to 50 °C (14 °F to 122 °F)
Operating humidity	≤ 90% RH (non-condensing)
Dimensions	372 × 311.2 × 46.4 mm (14.65 × 12.25 × 1.83 in)
Net weight	2.75 kg (6.05 lb) without HDD

Certifications & compliance	
Certifications	CE
EMC	2014/30/EU: EN 55032, EN IEC 61000-3-2, EN 61000-3-3, EN 55035
Safety	LVD 2014/35/EU: EN IEC 62368-1
Environmental	RoHS 2011/65/EU; REACH EC 1907/2006 (no SVHC above 0.1% w/w)
Compliance	NDAA

Dimensions (mm)

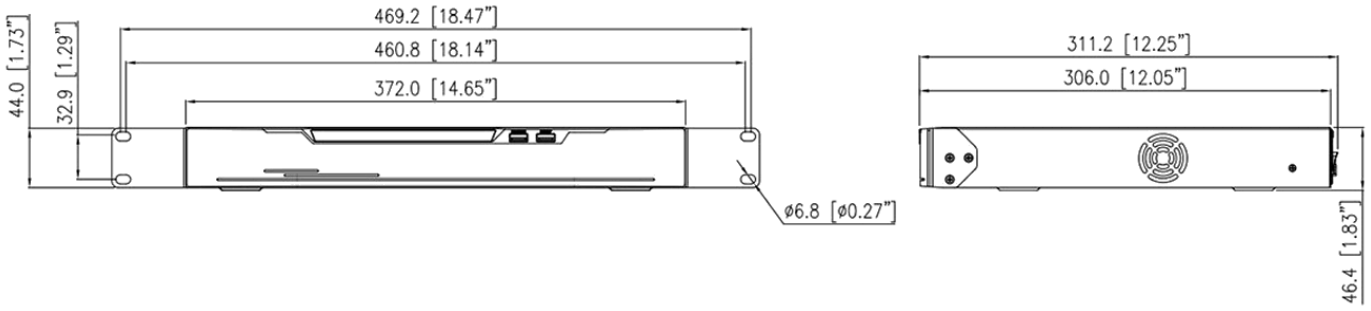

Rear panel



Rear panel, left to right: 16 × PoE ports, LAN, audio out/in, VGA/HDMI, USB, alarm I/O, AC power inlet, power switch, fan.

Specifications are subject to change without notice. Ernitec® is a registered trademark.