CHE087-nn

Ingenico Lane 3600 MultiGrip™ (with handle)

Version: 1.0

P011218

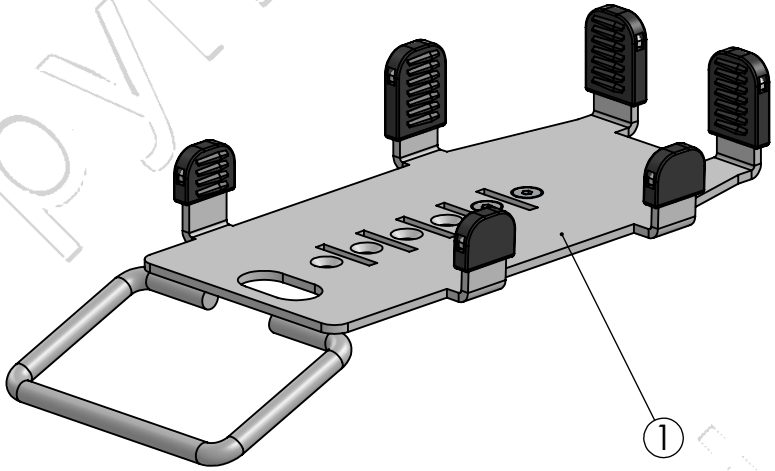

POS	PARTS LIST	QTY.	DESCRIPTION	BOX
1	ING3600-MH	1	Ingenico Lane 3600 MultiGrip™ (with handle)	
	B011	1	Box L300xW120xH78mm / L11.8xW4.7xH3.1in	

ADDITIONAL INFO:						
QTY. of configs in master box: 1			**Item Net Weight:** 0.32 kg | 0.71 lbs		**Pallet Capacity:** B011 (360 items)	
Colour: nn	01 = Light Grey	02 = Black	03 = Silver	04 = Pearl	05 = Iron Grey	32 = White

COPYRIGHT © ERGONOMIC SOLUTIONS 2025

Author: mbp (28-03-2025) | Last Update: Martin.Pedersen (28-03-2025)