Door Hub

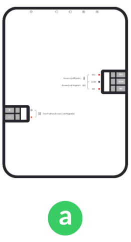

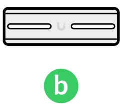

1

A

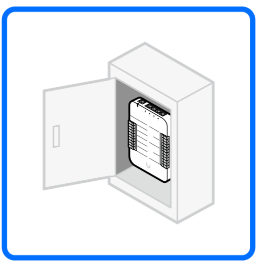

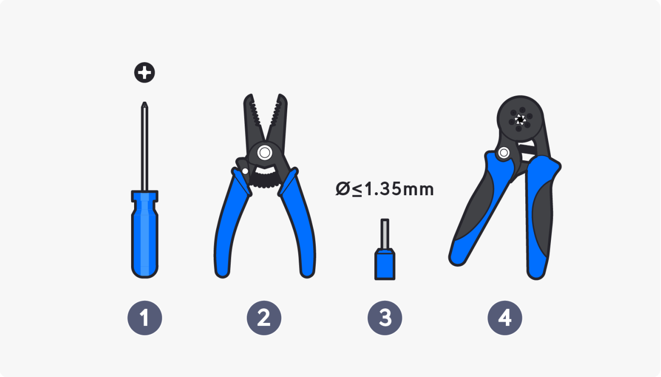
Ø≤1.35mm
1
2
3
4

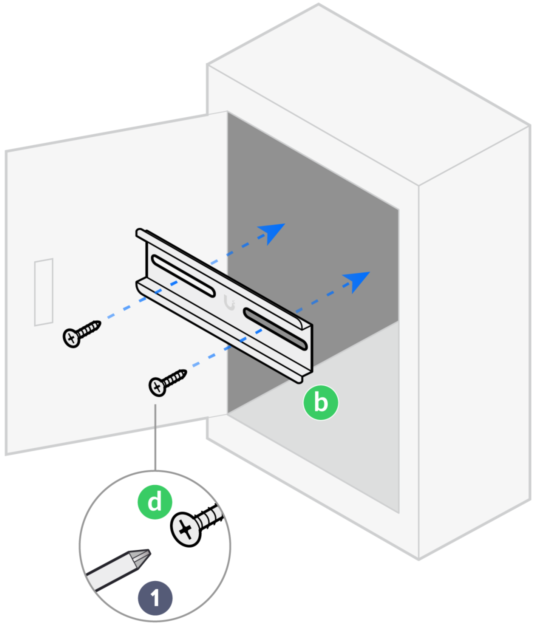

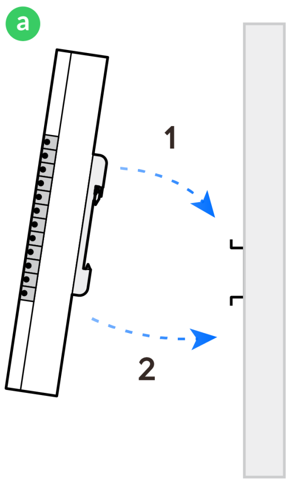

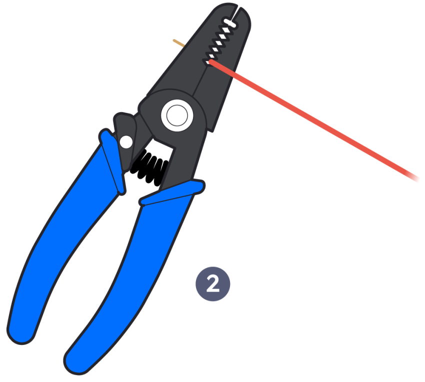

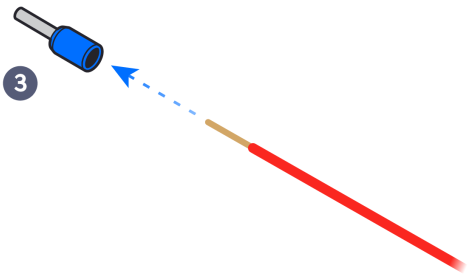

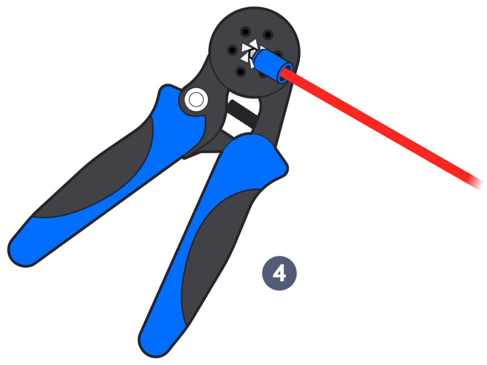

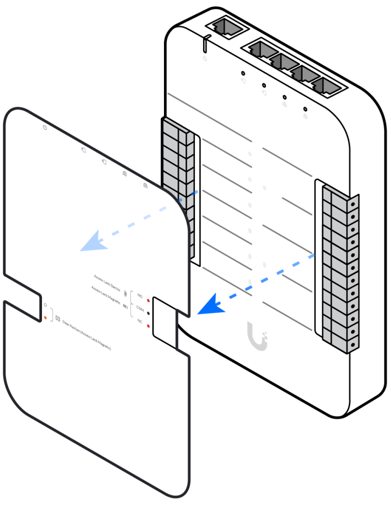

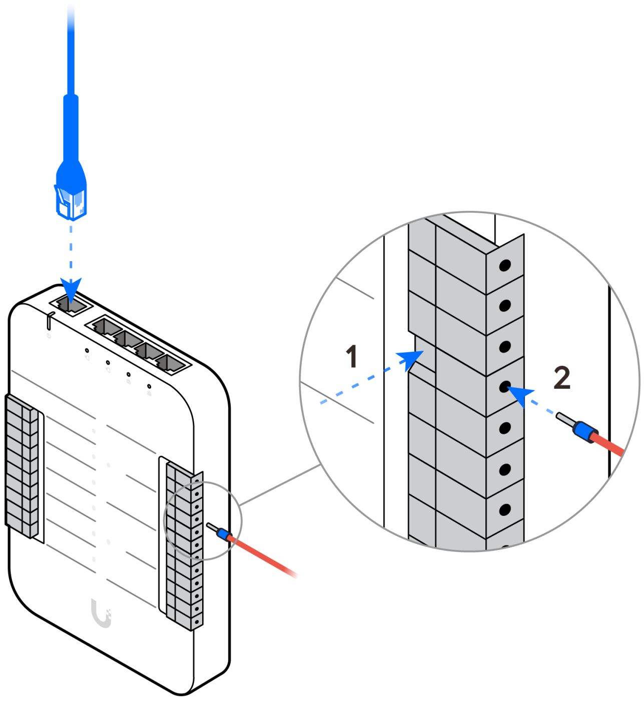

B

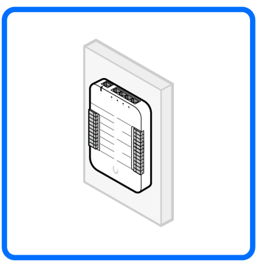

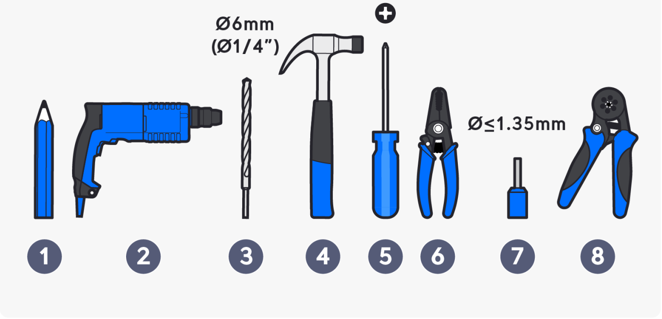
Ø6mm
(Ø1/4")
+
Ø≤1.35mm
1
2
3
4
5
6
7
8

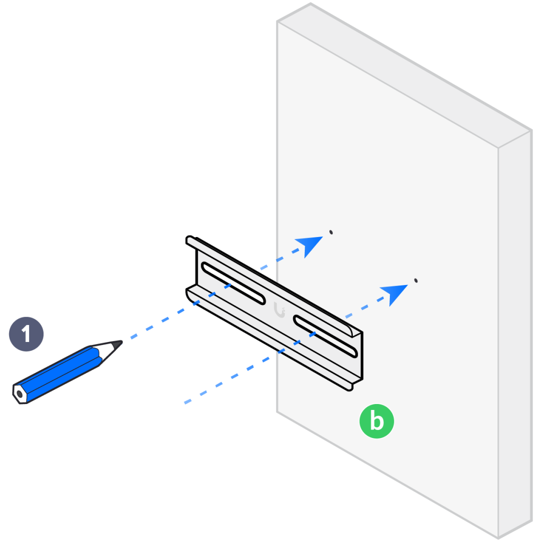

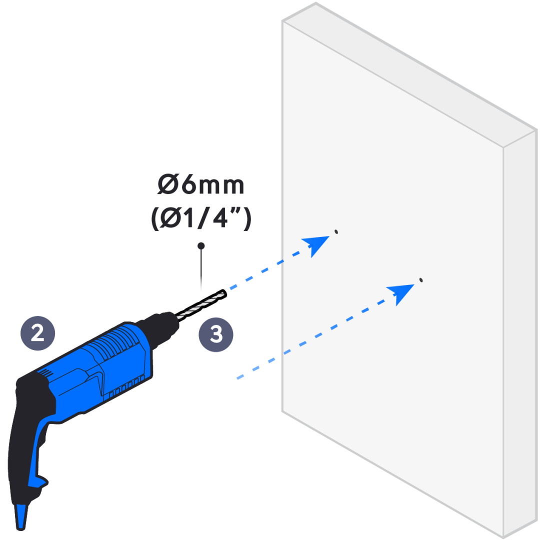

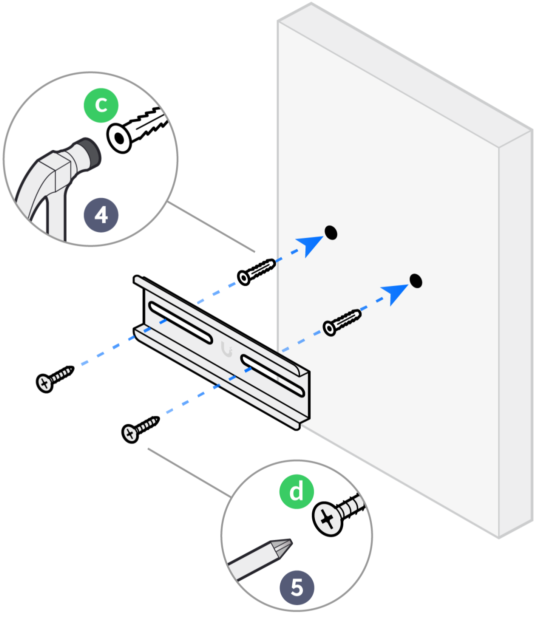

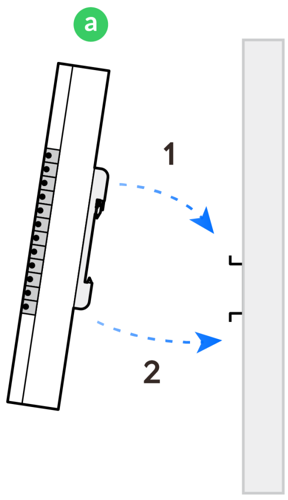

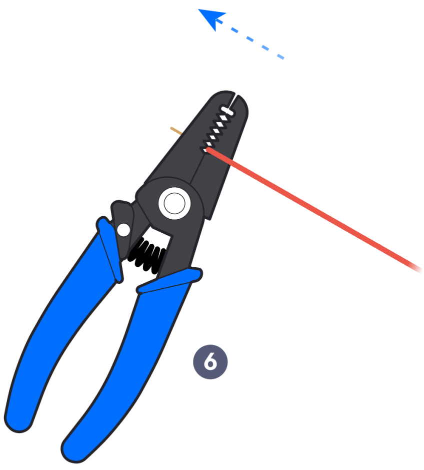

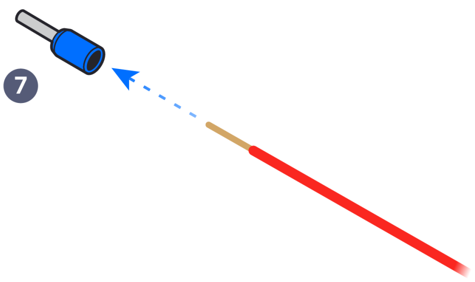

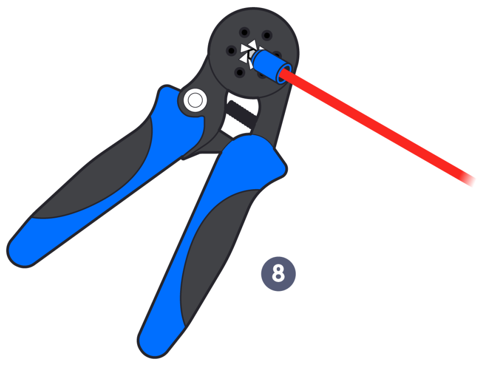

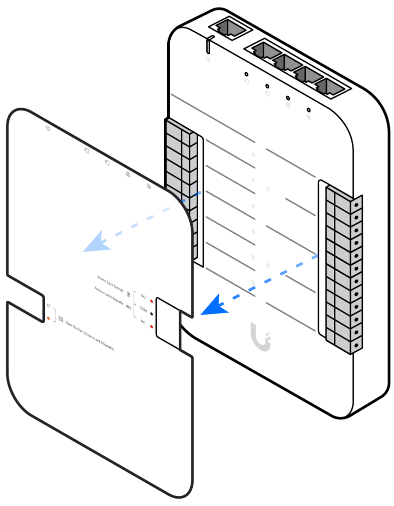

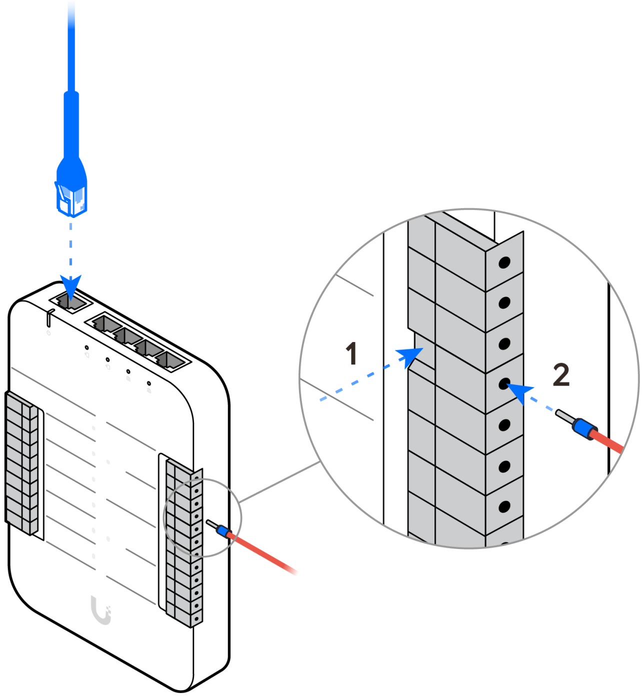

2

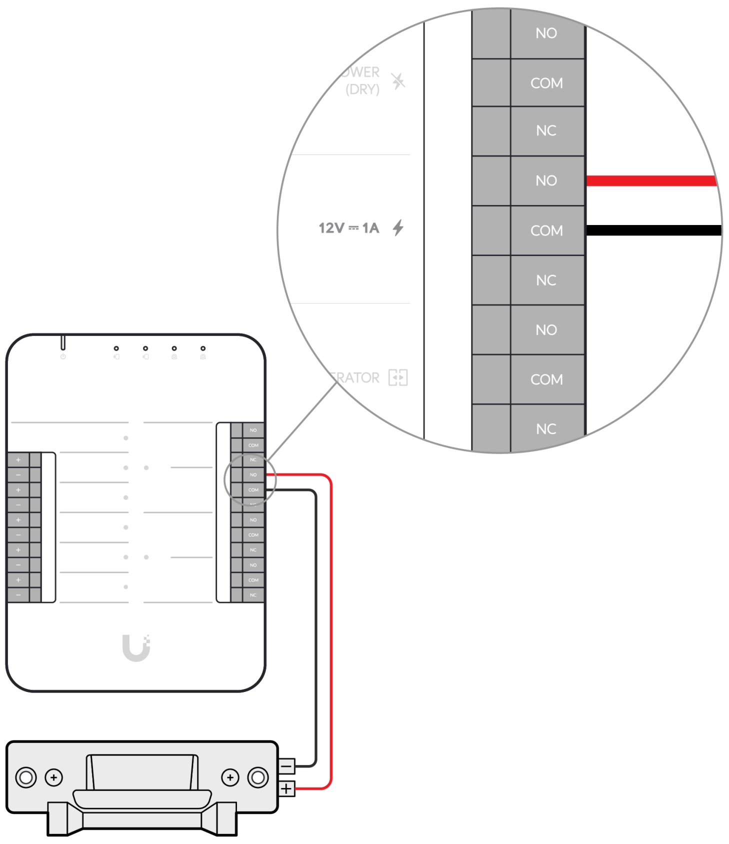
NO
COM
NC
NO
COM
NC
NO
COM
NC
WER
(DRY)
12V ⎓ 1A
RATOR

Fail-Secure Lock

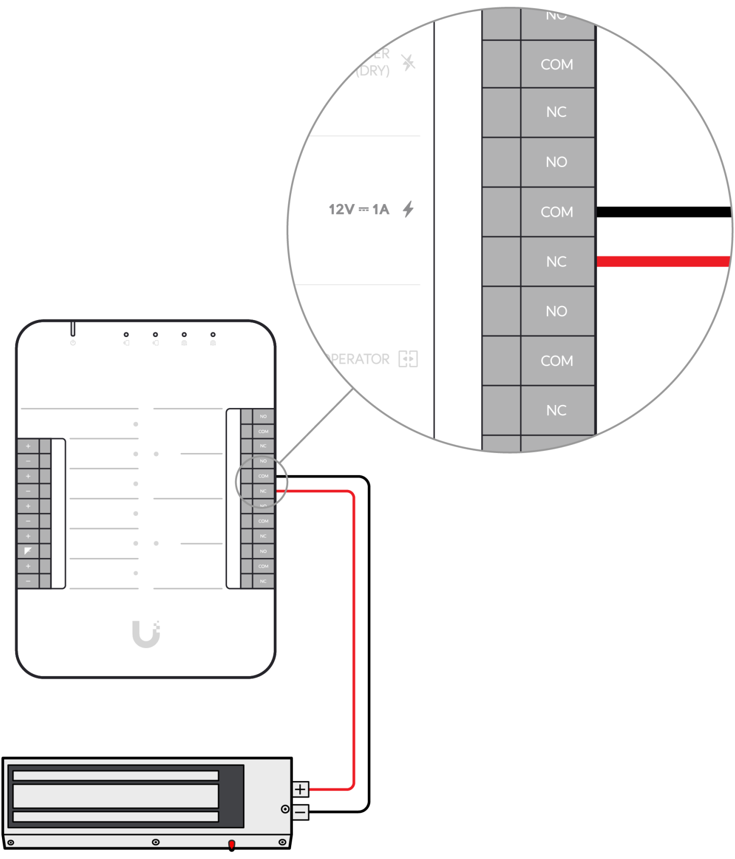
(DRY)
12V ⎓ 1A
PERATOR
NO
COM
NC
NO
COM
NC
NO
COM
NC

Fail-Safe Lock

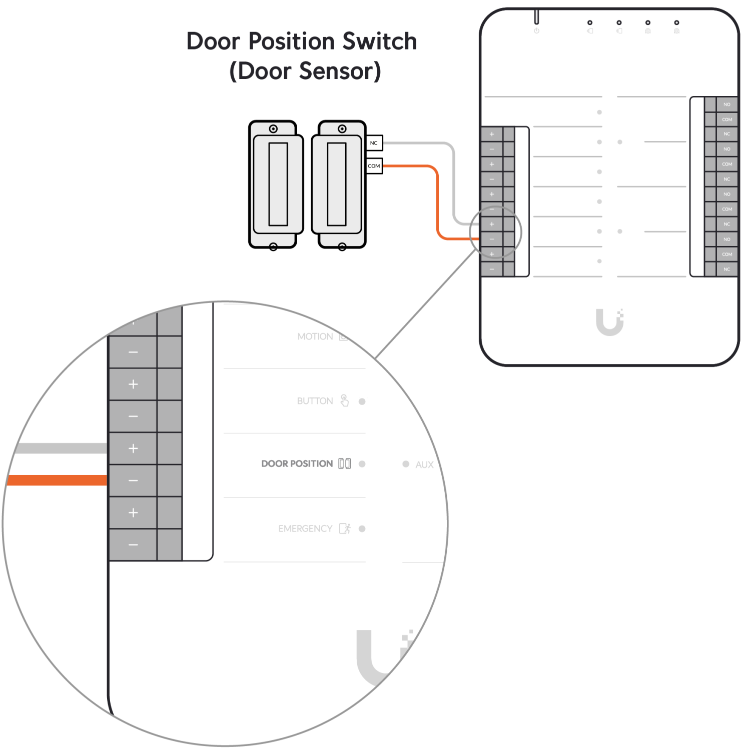
Door Position Switch
(Door Sensor)
NC
COM
MOTION
BUTTON
DOOR POSITION
AUX
EMERGENCY
+
–

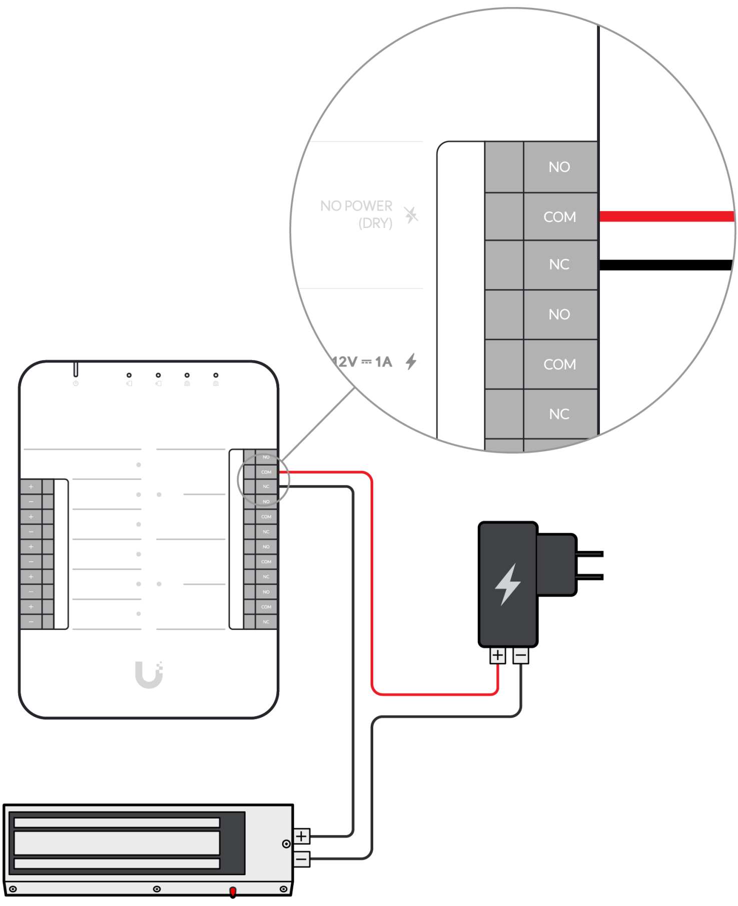
NO POWER
(DRY)
12V ⎓ 1A
NO
COM
NC
NO
COM
NC

Fail-Safe Lock

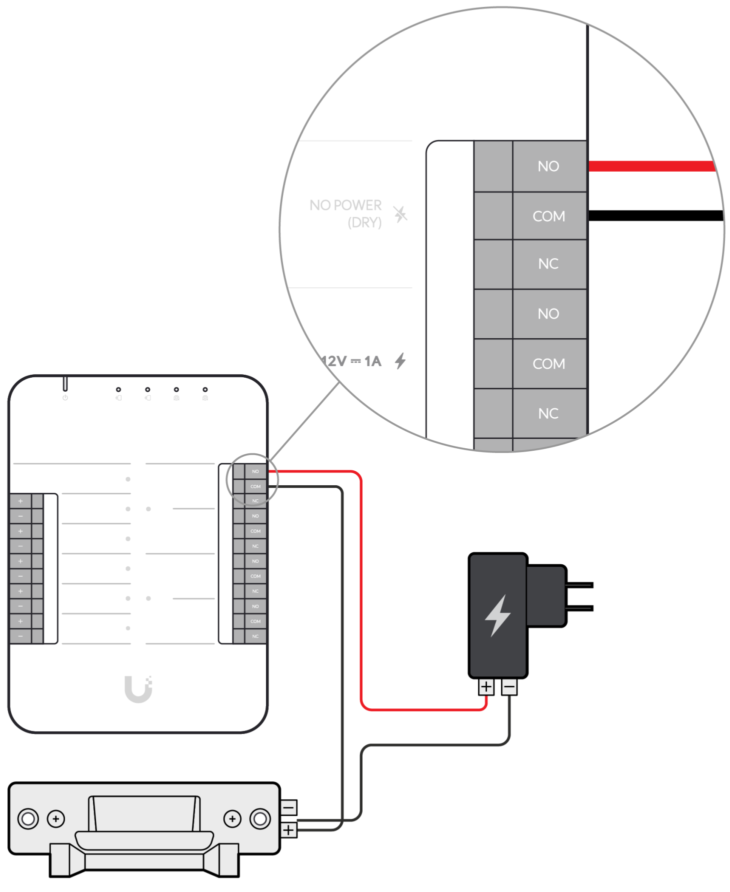
NO
COM
NC
NO
COM
NC
NO POWER (DRY)
12V ⎓ 1A
+
−

Fail-Secure Lock

Push Button

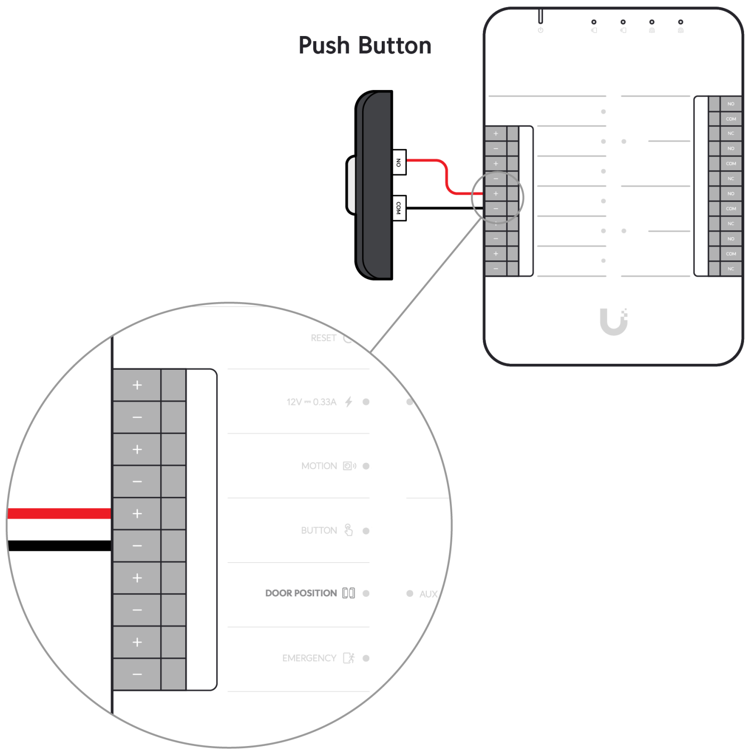
NO
COM
RESET
12V ⎓ 0.33A
MOTION
BUTTON
DOOR POSITION
AUX
EMERGENCY
+
−

Fire Panel

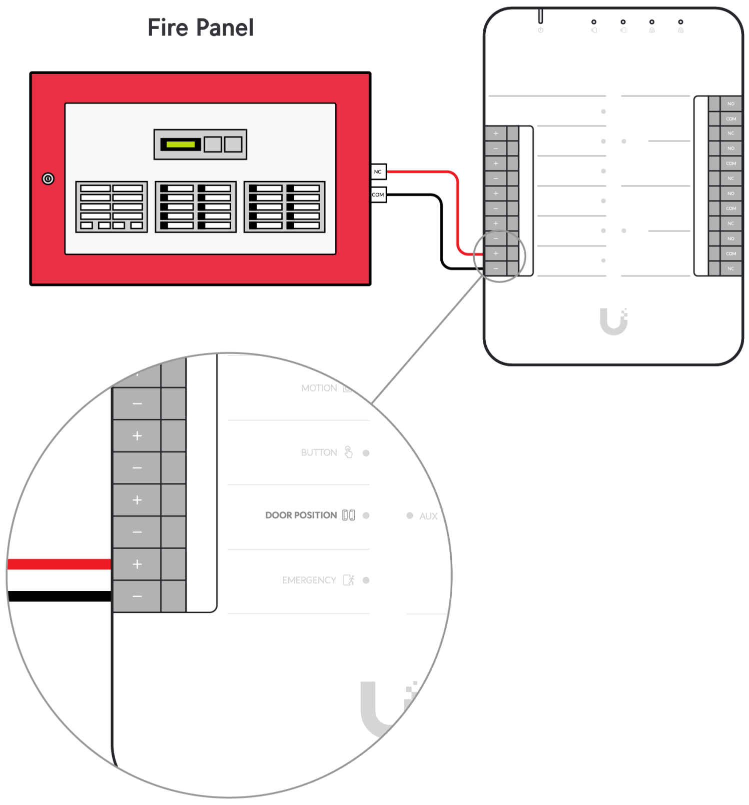
NC
COM
MOTION
BUTTON
DOOR POSITION
AUX
EMERGENCY
+
−

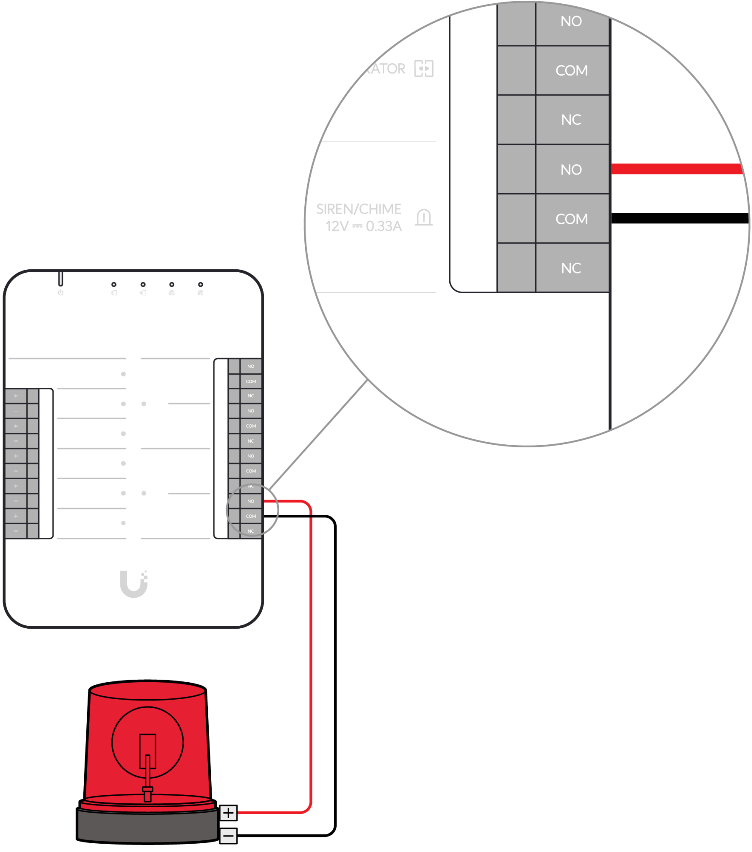
NO
COM
NC
NO
COM
NC
ATOR
SIREN/CHIME
12V ⎓ 0.33A

Siren

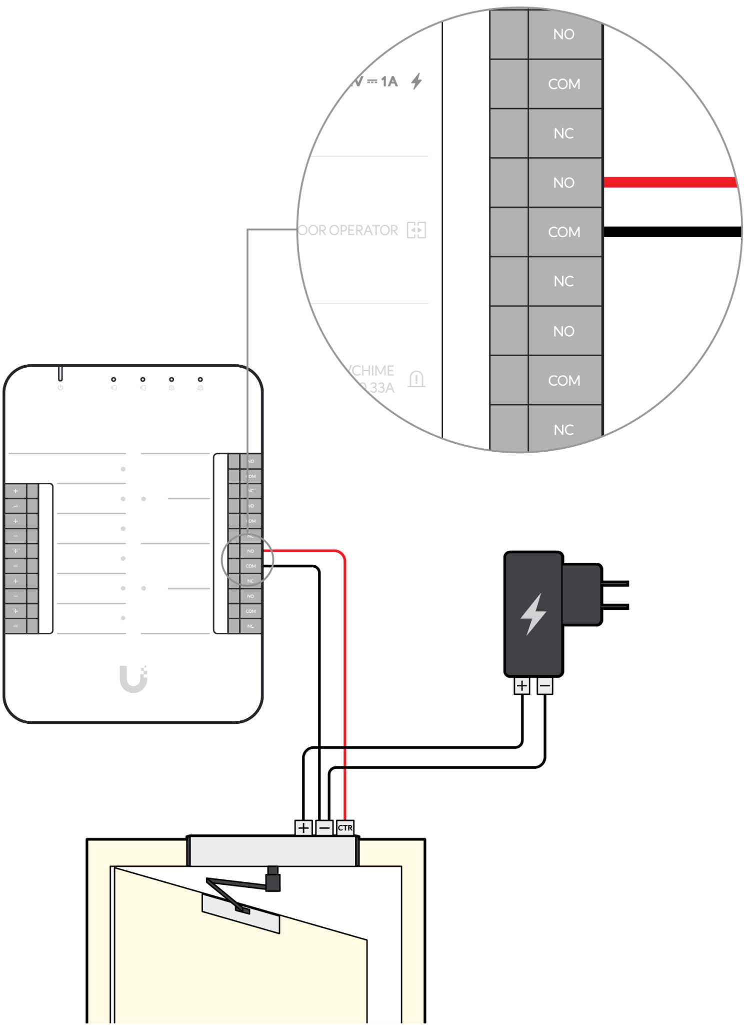
NO
COM
NC
NO
COM
NC
NO
COM
NC
V ⎓ 1A
OOR OPERATOR
CHIME
.33A
CTR

Door Operator

Motion Sensor

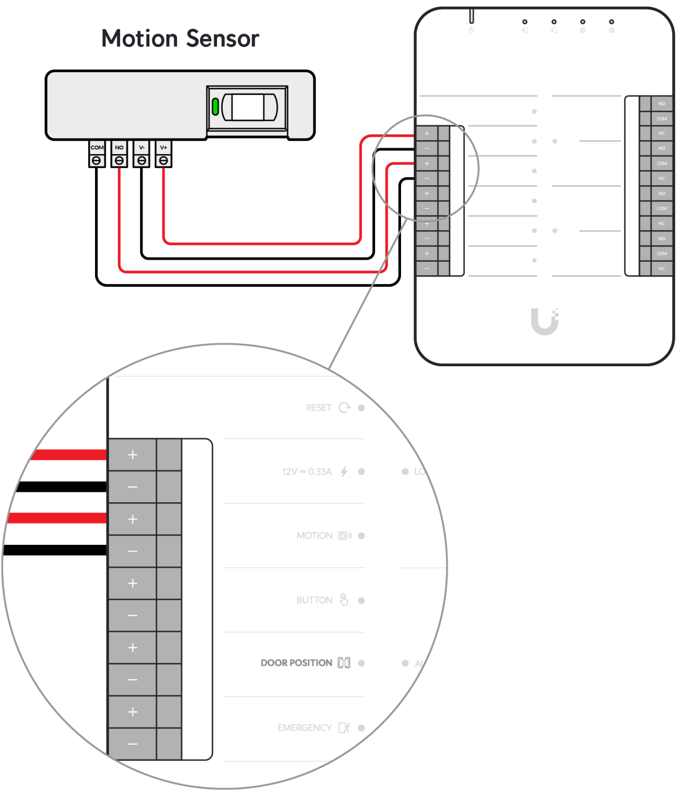
COM
NO
V-
V+
RESET
12V ⎓ 0.33A
MOTION
BUTTON
DOOR POSITION
EMERGENCY

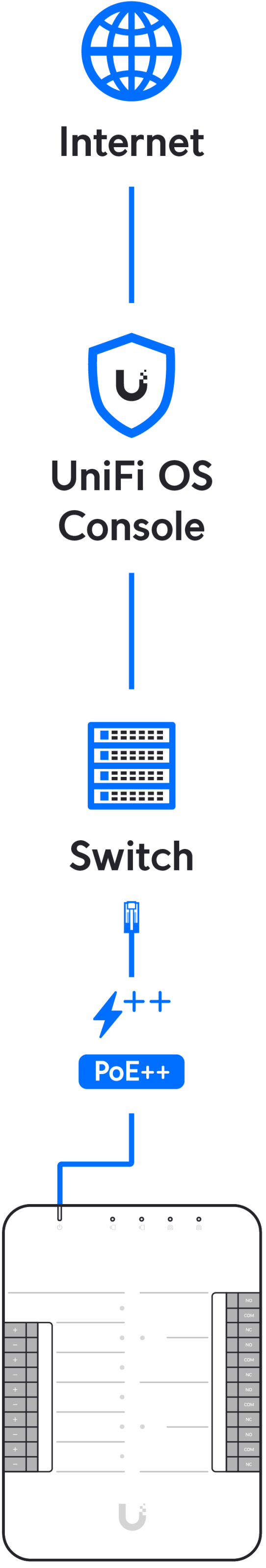
Internet
UniFi OS Console
Switch
PoE++

4

Download on the App Store

GET IT ON Google Play

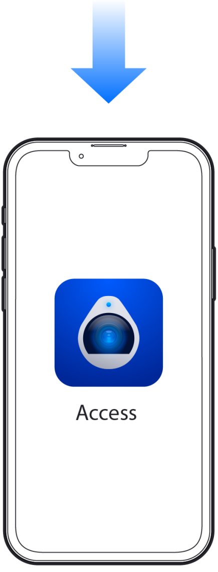

Get Answers
help.ui.com

UI Support

©2019-2021 Ubiquiti Inc. All rights reserved. Ubiquiti, Ubiquiti Networks, the Ubiquiti U logo, UniFi Access, and UniFi are trademarks or registered trademarks of Ubiquiti Inc. in the United States and in other countries. All other trademarks are the property of their respective owners.